LA SAN MARCO PROFILI SRL

INSTALLATION MANUAL
DECKING AND TILES

La San Marco Profili srl
Viale Europa 63, 31010 Soligo (TV) ITALY - Tel. +39 0438 980106 r.a - Fax +39 0438 980176 - P.I. 02195230269
info@lasanmarcoprofili.com - www.lasanmarcoprofili.com

Contents

La San Marco Profili srl
Viale Europa 63, 31010 Soligo (TV) ITALY - Tel. +39 0438 980106 r.a - Fax +39 0438 980176 - P.I. 02195230269
info@lasanmarcoprofili.com - www.lasanmarcoprofili.com

La San Marco Profili srl
Viale Europa 63, 31010 Soligo (TV) ITALY - Tel. +39 0438 980106 r.a - Fax +39 0438 980176 - P.I. 02195230269
info@lasanmarcoprofili.com - www.lasanmarcoprofili.com

INTRODUCTION

PURPOSE OF THE MANUAL

To provide detailed technical information on the installation of outdoors wooden floors, in particular for installation to a level of quality corresponding to good practice.

INSTALLERS' CODE OF CONDUCT

The installer should not only be competent, possessing a mix of specialist knowledge and skills, but must also demonstrate respect for persons, discretion and courtesy, including in his relations with the workplace, to avoid discrediting not only his own person but also the profession to which he belongs.
With reference to his conduct, there are certain unwritten rules of professionalism and honesty which we wish to recall.
Italian standard UNI 11556 (Unregulated professional activities Wooden and wood-based floor and wall installers) includes an annex on ethics and conduct.
The latter sets out obligatory rules of conduct for a professional installer.

- A wooden or wood-based floor installer must align his conduct with established standards and regulations in relation to professional trustworthiness, the desire to complete his work objectively, with diligence and in conformity with applicable professional standards. While focused on the needs of the client, he must keep him informed on the methods, results and precautions related to the maintenance of the results and any criticalities which may affect their quality. The installer must agree his fee in advance in a clear and trustworthy manner.
- A wooden or wood-based floor installer must keep up to date with technical advances in his profession, and assess the work he is required to do in relation to his own competency, so as to assure proper quality standards. The work of the installer, as part of the entire process, must always be done with methodological rigour and with the aim of providing professional results in line with established practice and the quality standards demanded by any applicable standards.
- A wooden or wood-based floor installer must maintain a professional demeanour of honesty and respect for all other persons involved in completing the work in any capacity.
- A wooden or wood-based floor installer must ensure non-disclosure of information regarding the work itself and any attendant information.

La San Marco Profili srl
Viale Europa 63, 31010 Soligo (TV) ITALY - Tel. +39 0438 980106 r.a - Fax +39 0438 980176 - P.I. 02195230269
info@lasanmarcoprofili.com - www.lasanmarcoprofili.com

On the basis of these principles, we list below some of the principal rules of conduct in relation to clients and vendors.

- Observance of agreed working hours, with prompt reporting of any delays;
- Adoption of functional and safe work clothing;
- Personal hygiene and hygienic conduct in relation to persons and the environment;
- Respect for the environment in preparing the work and work area and tidying up on completion;
- Prompt reporting of any problems encountered during the process relating to the quality of the materials or their use;
- Scheduling of material deliveries during the installation to optimise the progress of the work itself.

INSTALLERS' RESPONSIBILITIES

An installer is a physical person who takes on the job of installing wooden or wood-based flooring; in particular, he is a subject who, on the basis of a certain level of knowledge, ability, competency and conduct, works professionally and expertly in making floors, including for outdoors applications.

The installer is responsible for the various phases of the work, from initial verification of the condition of the site to the concluding testing/handover to the client.

For his detailed responsibilities, refer to UNI 11265 (Wooden and wood-based floors and walls – Installation – Competency, responsibility and contractual obligations) and the Italian Civil Code.

La San Marco Profili srl
Viale Europa 63, 31010 Soligo (TV) ITALY - Tel. +39 0438 980106 r.a - Fax +39 0438 980176 - P.I. 02195230269
info@lasanmarcoprofili.com - www.lasanmarcoprofili.com

EQUIPMENT AND APPAREL

To properly install wooden decking, proper equipment and clothing are required to work comfortably, continuously, functionally and safely.

TRACING EQUIPMENT:
pencil, rule, level, square, angle meter, level staffs of various sizes, etc.

CLEANING EQUIPMENT:
broom, dust pan, vacuum cleaner and bags for sorted waste disposal, etc.

INSTALLATION EQUIPMENT:
work bench or trestles, small parts boxes, miscellaneous wood saws, manual and electric, angle cutter, metal saw, compressor, screw driver, alternating saw, drill, angle grinder, extension cables, portable lamp, woodworking tool chest.
Clip locking wrench for the EASYCHANGE system

APPAREL
work clothing with pockets, tool belt, safety boots, gloves, safety glasses, etc.

THE PRODUCT: WOODEN DECKING

Decking is defined by UNI 11538–1: 2014 as an outdoors flooring composed of covering elements secured directly to a linear supporting structure or beams, themselves supported by a framework.
SAN MARCO PROFILI wooden decking is made in a variety of woods.
For their characteristics, refer to their data sheets.

La San Marco Profili srl
Viale Europa 63, 31010 Soligo (TV) ITALY - Tel. +39 0438 980106 r.a - Fax +39 0438 980176 - P.I. 02195230269
info@lasanmarcoprofili.com - www.lasanmarcoprofili.com

MATERIALS AND ACCESSORIES

The following materials and accessories are required to install wooden decking on unstable ground (natural soil / sand / gravel) and stable ground (concrete screed / existing flooring / other):

- JOISTS
  - ✓ Wooden joists available from stock (section 20 x 50/70) of variable length;
  - ✓ Aluminium joists, silver anodised (15 micron) (section 20 x 50) of variable length;

- JACKS / BLOCKS / SHIMS
  - ✓ Jacks of variable height, 22/30 to 210/380;
  - ✓ 20 mm blocks for jacks;
  - ✓ Shims: disks, height 5 mm – dia. 50 mm

- MOUNTING ELEMENTS FOR WOODEN DECKING
  - ✓ Stainless steel clips;
  - ✓ Four hook stainless steel clips;
  - ✓ A2 stainless steel woodscrews, countersunk cross head;
  - ✓ A2 stainless steel woodscrews, countersunk torx head;
  - ✓ A2 stainless steel self-starting screws for aluminium, countersunk cross head;

- MAINTENANCE AND TREATMENT PRODUCTS
  - ✓ Solvent based impregnating finish for DECKING (Deck Oil);
  - ✓ Water based penetrating finish for DECKING (Deck H2O);
  - ✓ Detergent for solvent based impregnating finish (Deck Cleaner).

- EASYCHANGE PROFILE MEMBERS
  - ✓ Aluminium profile members with pre-installed EasyChange clips, length 200 cm (approx.)

La San Marco Profili srl
Viale Europa 63, 31010 Soligo (TV) ITALY - Tel. +39 0438 980106 r.a - Fax +39 0438 980176 - P.I. 02195230269
info@lasanmarcoprofili.com - www.lasanmarcoprofili.com

STORING WOODEN DECKING ON SITE

Wooden decking is delivered to the site by San Marco Profili on pallets, wrapped in waterproof film.
Before it is used, the material should be stored out of the weather, in particular, out of direct sunlight and high temperatures.
Before it is installed, the boards must be checked for defects and treated with DECK OIL or DECK H2O impregnating finish.

HANDOVER TO THE CLIENT: WOODEN DECKING

Before the finished flooring is handed over to the client, the wooden decking installation must be checked and verified.
The outcome of the verification, run in the presence of the client, director of works or other delegated person, must be formally registered and documented.
The document must be signed by the person who did the work.

NOTE: THE COMPANY RECOMMENDS DRAWING UP AND KEEPING DOCUMENTATION ATTESTING ALL CHECKS AND INSPECTIONS RUN DURING THE JOB RELATING TO THE PROPER COMPLETION OF THE WORK IN PROGRESS AND THE QUALITY OF THE MATERIALS EMPLOYED

La San Marco Profili srl
Viale Europa 63, 31010 Soligo (TV) ITALY - Tel. +39 0438 980106 r.a - Fax +39 0438 980176 - P.I. 02195230269
info@lasanmarcoprofili.com - www.lasanmarcoprofili.com

INSTALLING DECKING WITH SCREWS OR CLIPS ON UNSTABLE GROUND (natural soil, sand, gravel, etc.)

DEFINITION

By "installing wooden decking" we mean the set of operations and procedures required to install the product, from preliminary inspection to impregnation treatments and handover of the finished job.

INSTALLING WITH SCREWS ONTO UNSTABLE GROUND

PRELIMINARY INSPECTION AND ASSESSMENT

Inspection of the type of ground in question, with reference to its density and stability in relation to the design load.

N.B. Any structural calculations will be done at the client's expense to the designer's instructions.

Inspection of the material prior to use:

- dimensional uniformity of the joists;
- level of acceptability of the wooden decking pursuant to UNI 11538-1.

La San Marco Profili srl
Viale Europa 63, 31010 Soligo (TV) ITALY - Tel. +39 0438 980106 r.a - Fax +39 0438 980176 - P.I. 02195230269
info@lasanmarcoprofili.com - www.lasanmarcoprofili.com

PREPARING THE SURFACE FOR INSTALLATION OF THE FRAMEWORK

The surface onto which the framework (beams and joists) is to be installed must be prepared so as not to allow settling into the ground of the framework itself, which is installed above ground level to allow water to run off and prevent the wooden structures rotting.

If the surface onto which the framework is to be installed, rather than being natural soil, consists of sand or gravel, it must be abundantly wetted and then compacted to obtain a dense surface onto which the structural cement slabs can be laid;

A layer of suitable unwoven fabric must be installed to prevent plant growth (fig. 01).

FIGURE 01

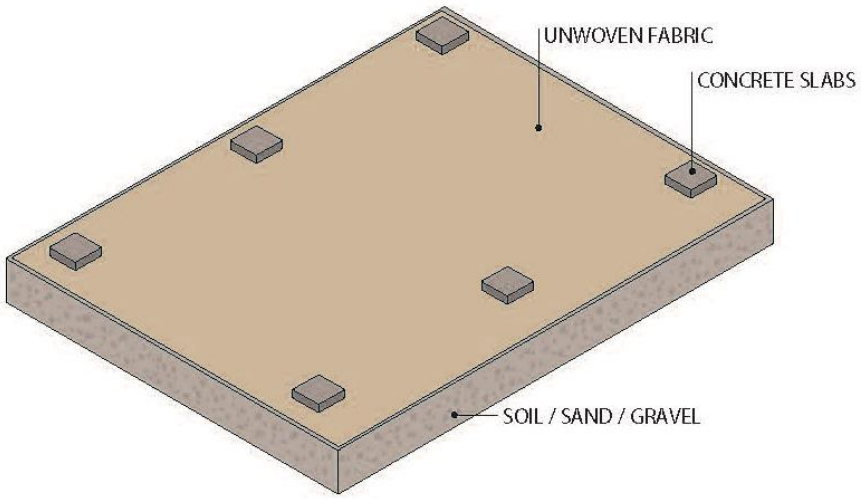

Cement slabs must be installed, of suitable size to bear the projected load (refer to the designer for details).

La San Marco Profili srl
Viale Europa 63, 31010 Soligo (TV) ITALY - Tel. +39 0438 980106 r.a - Fax +39 0438 980176 - P.I. 02195230269
info@lasanmarcoprofili.com - www.lasanmarcoprofili.com

A slope of **1 cm** per linear metre must be provided to allow for run off (fig. 02).

FIGURE 02

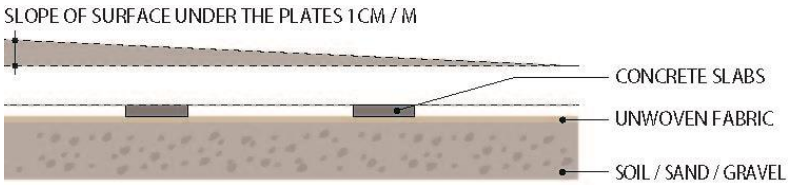

The cement slabs anchor the framework and distribute the load onto the underlying ground (fig. 03).

FIGURE 03

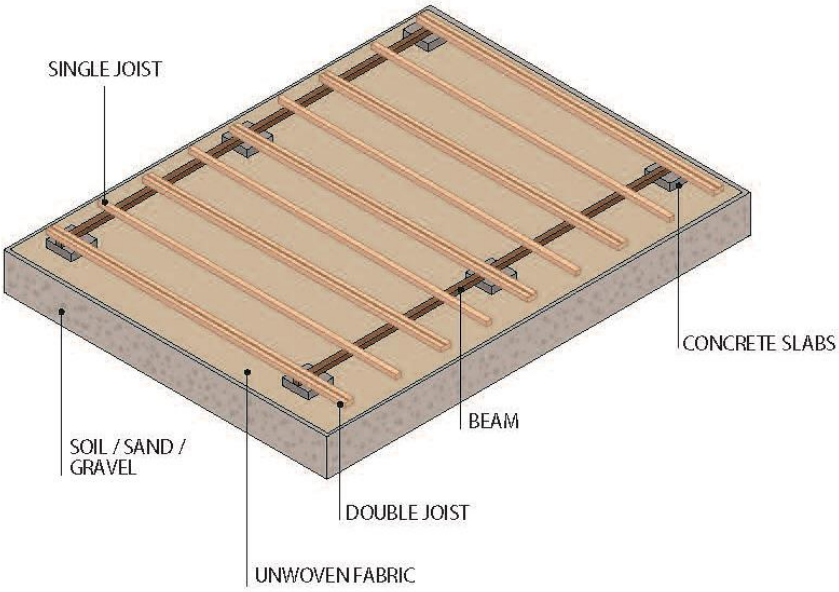

La San Marco Profili srl
Viale Europa 63, 31010 Soligo (TV) ITALY - Tel. +39 0438 980106 r.a - Fax +39 0438 980176 - P.I. 02195230269
info@lasanmarcoprofili.com - www.lasanmarcoprofili.com

The cement slabs can also act as supports for the jacks if the decking is to be suspended (fig. 04).

FIGURE 04

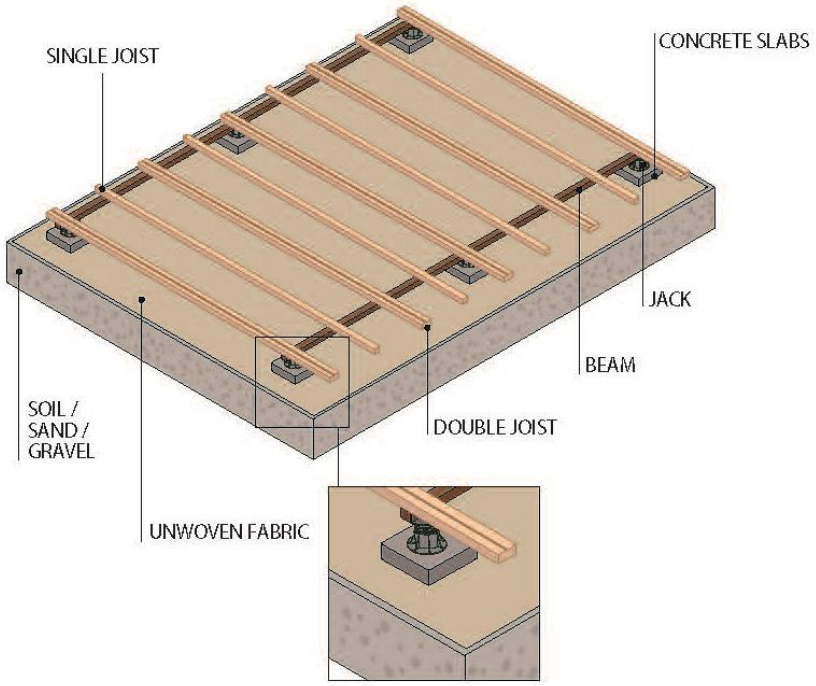

If the surface onto which the framework is to be installed is sloping too much, special attention must be paid to positioning the vertical supports (shims and jacks), obviously of variable height (fig. 05).

FIGURE 05

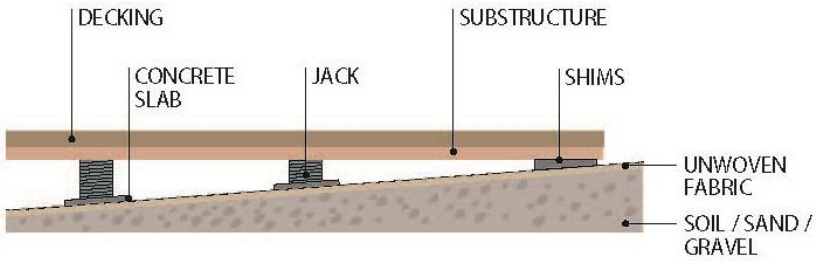

La San Marco Profili srl
Viale Europa 63, 31010 Soligo (TV) ITALY - Tel. +39 0438 980106 r.a - Fax +39 0438 980176 - P.I. 02195230269
info@lasanmarcoprofili.com - www.lasanmarcoprofili.com

These elements must be supported in a stable way and not subject to differential settling. The framework of beams and/or joists is installed above the jacks; we recommend using bracing to increase the overall stability of the installation (fig. 06).

FIGURE 06

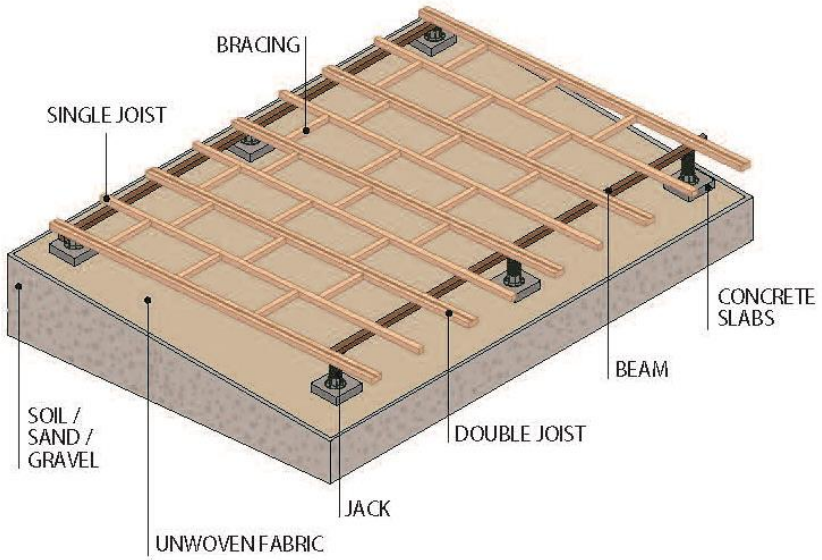

INSTALLING THE FRAMEWORK

The framework may be made of wood or aluminium, with a double structure of beams and joists; if in wood, the humidity of the material must be in the range 15 % ± 3 % at installation.

The double structure framework must be anchored to previously prepared points: cement slabs or jacks.

The joists must be secured to the cement slabs with anchor bolts.

Use woodscrews or self-starting screws for aluminium to secure the joists, depending on the type of joist.

In simple or regular formwork installations, double beams are always used to support and secure the heads of the boards and single joists used to secure the boards at internal positions (drawings 07 and 08).

La San Marco Profili srl
Viale Europa 63, 31010 Soligo (TV) ITALY - Tel. +39 0438 980106 r.a - Fax +39 0438 980176 - P.I. 02195230269
info@lasanmarcoprofili.com - www.lasanmarcoprofili.com

FIGURE 07

SIMPLE INSTALLATION

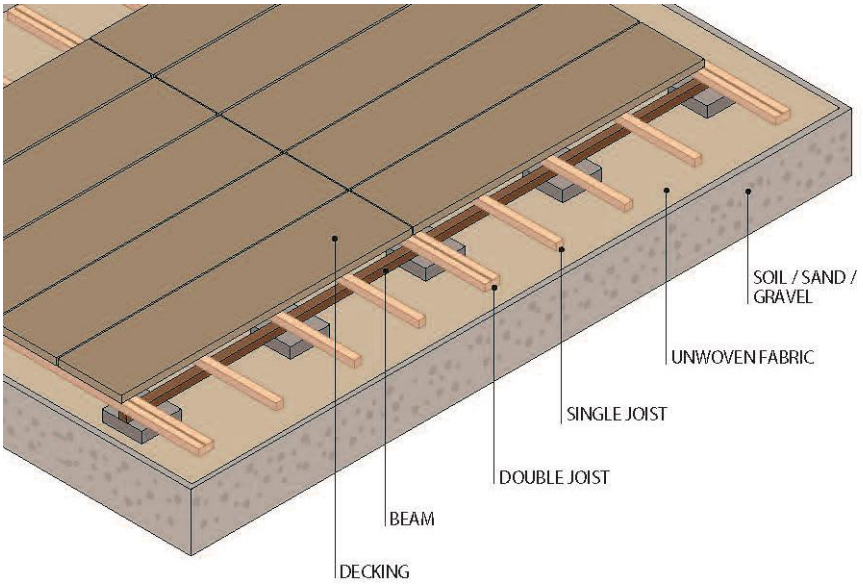

FIGURE 08

REGULAR FORMWORK INSTALLATION

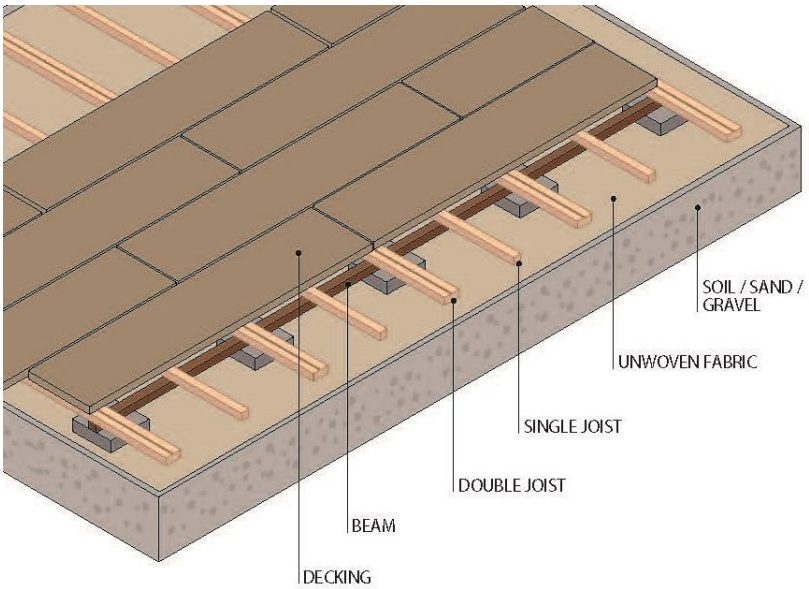

La San Marco Profili srl
Viale Europa 63, 31010 Soligo (TV) ITALY - Tel. +39 0438 980106 r.a - Fax +39 0438 980176 - P.I. 02195230269
info@lasanmarcoprofili.com - www.lasanmarcoprofili.com

The first row of beams are spaced by at most 70 cm, and secured to the concrete slabs with anchor bolts (fig. 09).

FIGURE 09

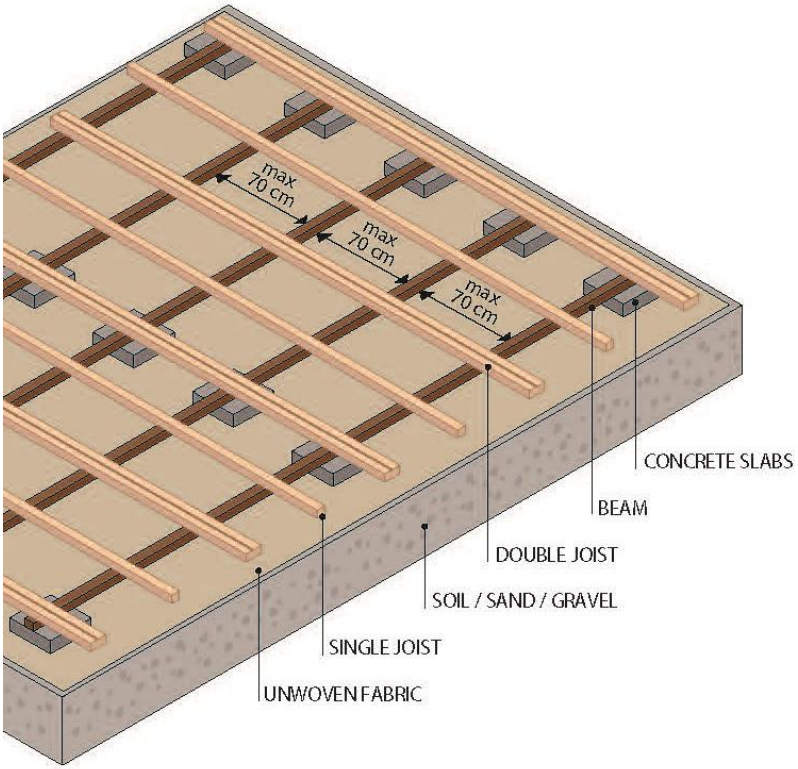

La San Marco Profili srl
Viale Europa 63, 31010 Soligo (TV) ITALY - Tel. +39 0438 980106 r.a - Fax +39 0438 980176 - P.I. 02195230269
info@lasanmarcoprofili.com - www.lasanmarcoprofili.com

If the decking floor is not free on all sides, the head of the beam must be 40 mm away from the vertical wall (fig. 10).

FIGURE 10

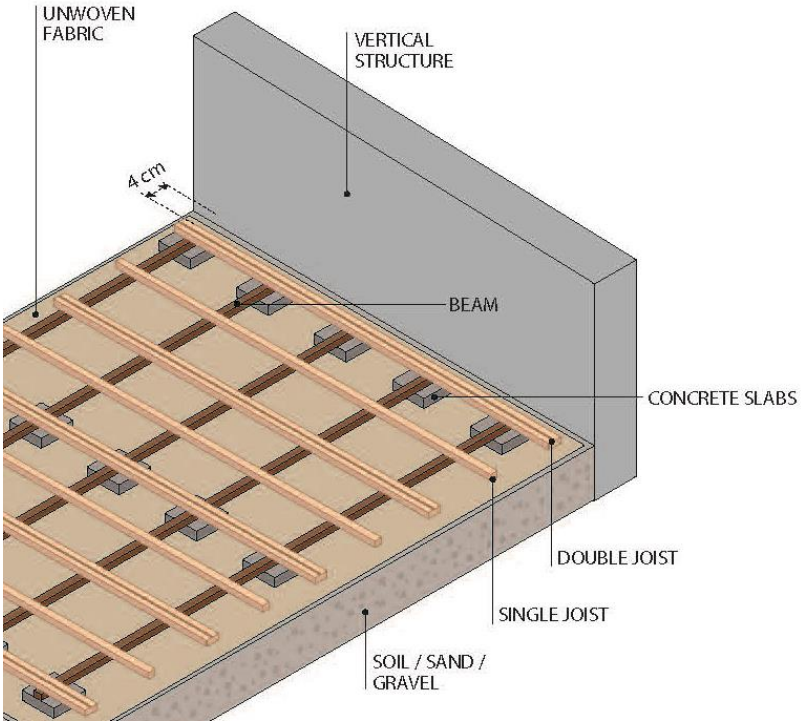

If the decking floor is not free on all sides, the initial joists must also be 4 cm away from the vertical wall (fig. 11).

FIGURE 11

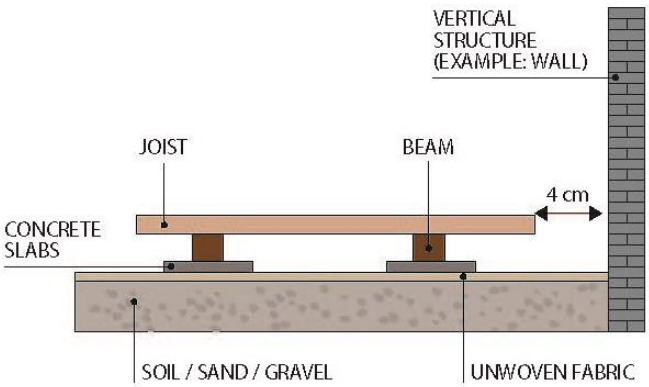

La San Marco Profili srl
Viale Europa 63, 31010 Soligo (TV) ITALY - Tel. +39 0438 980106 r.a - Fax +39 0438 980176 - P.I. 02195230269
info@lasanmarcoprofili.com - www.lasanmarcoprofili.com

The joists must be spaced 35 cm apart or 25 cm if the boards on top are wider than 120 mm (fig. 12).

FIGURE 12

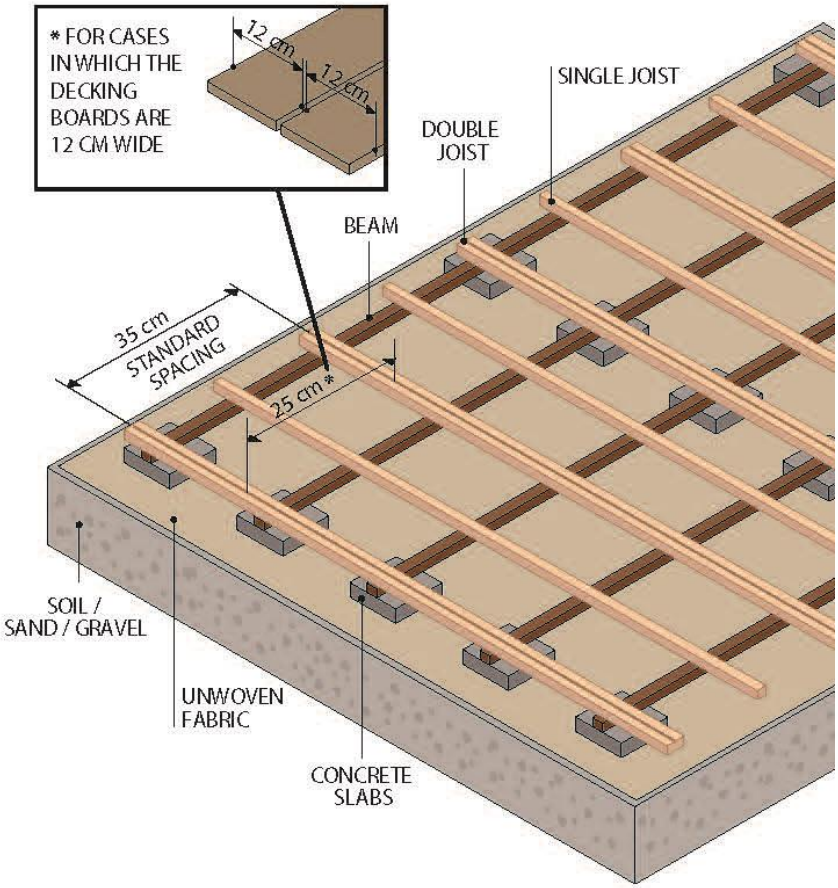

La San Marco Profili srl
Viale Europa 63, 31010 Soligo (TV) ITALY - Tel. +39 0438 980106 r.a - Fax +39 0438 980176 - P.I. 02195230269
info@lasanmarcoprofili.com - www.lasanmarcoprofili.com

INSTALLING THE DECKING

Installing a decking floor with the screws which secure the boards to the underlying framework exposed or concealed by studs is a design choice which affects the overall look of the floor.

Once the framework has been constructed and the slopes checked, the decking itself can be installed.

1) The first step is to impregnate the boards.

Impregnate the boards with DECK OIL or DECK H2O, depending on whether the design specifies a solvent or water based protective product.

Even after all boards have been impregnated with the product, if the heads of the boards need to be cut to length to fit the installation, the cut parts must be impregnated again.

Instructions given on the product's data sheet must be followed while carrying out the impregnation treatment.

2) The next step is to drill the boards.

The boards must be drilled 2 cm from their sides and from their ends and similarly in all meeting points with the joist; the drilled holes should be 0.5 mm larger than the diameter of the screws. Use only stainless steel screws.

The holes must be countersunk to ensure that, when they are inserted, the heads of the screws are slightly below the level of the decking itself. If screws concealed with studs are to be used, the countersinking must be sufficient to ensure that the studs are flush with the level of the boards when they are inserted (fig. 13).

FIGURE 13

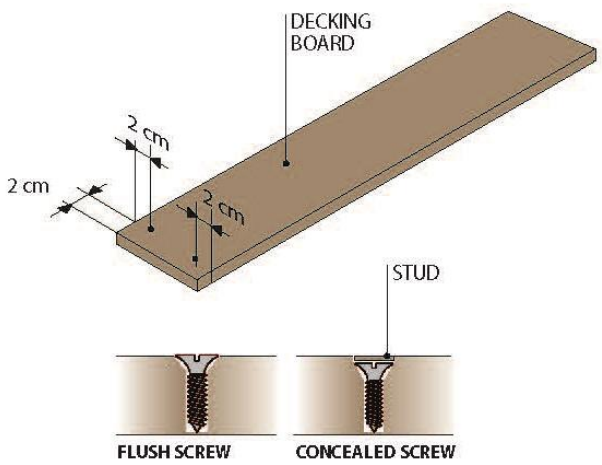

La San Marco Profili srl
Viale Europa 63, 31010 Soligo (TV) ITALY - Tel. +39 0438 980106 r.a - Fax +39 0438 980176 - P.I. 02195230269
info@lasanmarcoprofili.com - www.lasanmarcoprofili.com

3) The third step is to secure the boards and build up the flooring surface.
Install the first boards, taking care that they are not curved and as uniform as possible; it should be noted that wood is a natural material which may not be perfectly straight lengthwise (curved board) (fig. 14)

FIGURE 14

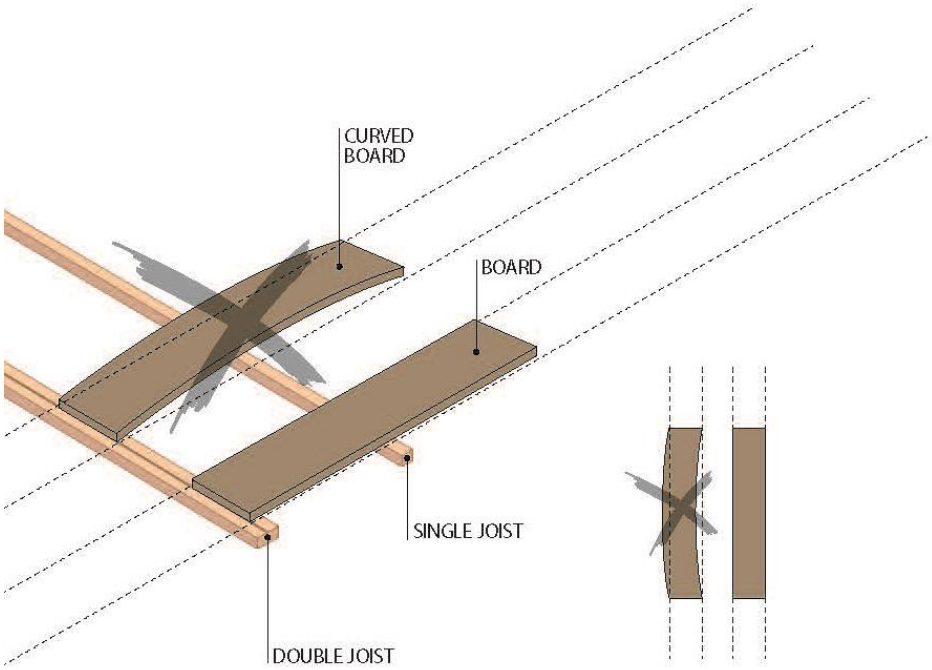

If the decking floor is butted against a vertical structure (a wall) on one or more sides, make sure to leave around 20mm space between the first board and the wall itself for water to run off (whether the board is flush with the joist or not, see drawings 15 and 16) and install the beams in such a way that they do not impede run off.

La San Marco Profili srl
Viale Europa 63, 31010 Soligo (TV) ITALY - Tel. +39 0438 980106 r.a - Fax +39 0438 980176 - P.I. 02195230269
info@lasanmarcoprofili.com - www.lasanmarcoprofili.com

FIGURE 15

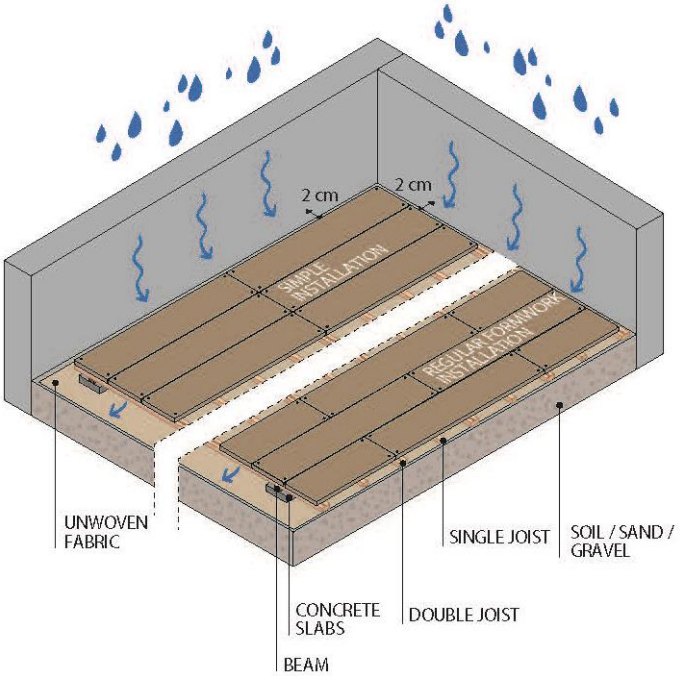

FIGURE 16

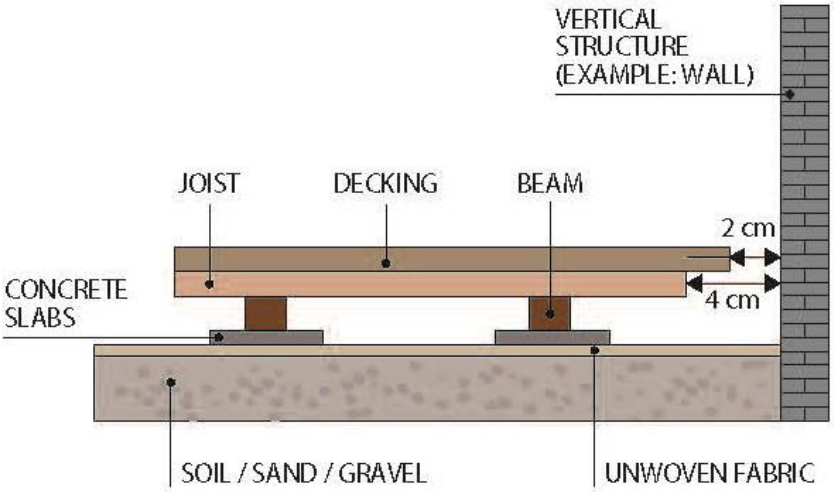

If the decking floor has free sides, i.e. not butted against a wall, the first board must be installed in line with the end piece (fig. 17).

La San Marco Profili srl
Viale Europa 63, 31010 Soligo (TV) ITALY - Tel. +39 0438 980106 r.a - Fax +39 0438 980176 - P.I. 02195230269
info@lasanmarcoprofili.com - www.lasanmarcoprofili.com

FIGURE 17

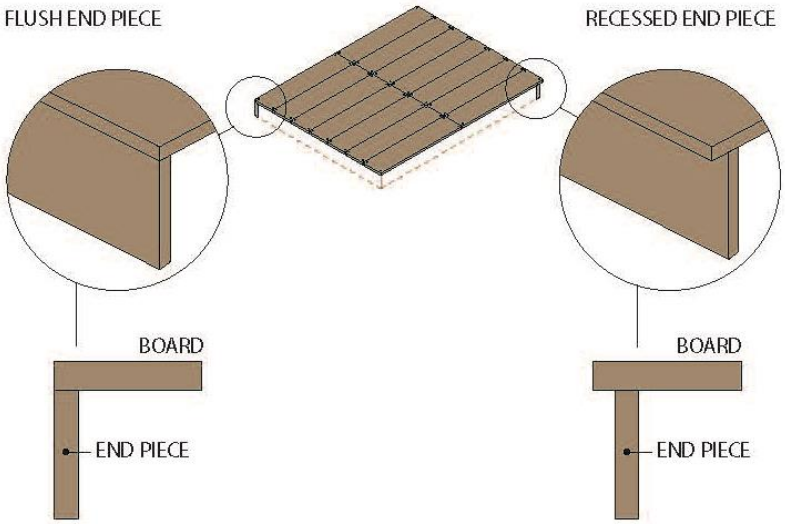

The end piece may be flush with the first board, or recessed under it.

For decking floors with sides butted against other flooring structures,

make sure to leave a gap of at least 1 cm between the first board and the adjacent flooring, to allow water to run off (fig. 18).

FIGURE 18

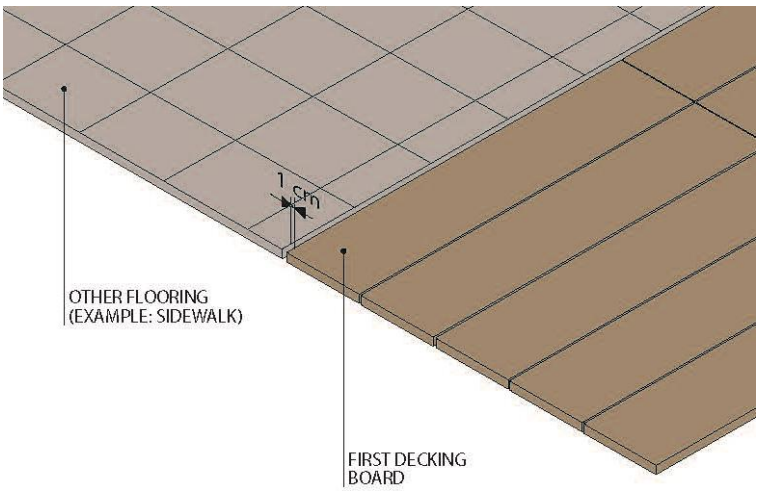

INSTALLING THE BOARDS AFTER THE FIRST ONE

When installing the successive boards, choose the straightest and most even ones possible to ensure uniform alignment and spacing between them, to the extent that this is possible in light of the fact that wood is a natural material which may not be perfectly straight lengthwise (curved board). The

decking boards must be spaced by at least 6 mm ± 2 mm longitudinally and 3 mm ± 2 mm between their ends for residential applications, and 5 mm ± 1 for high occupancy applications (fig. 19 and 20).

FIGURE 19

GAPS BETWEEN HEADS OF BOARDS

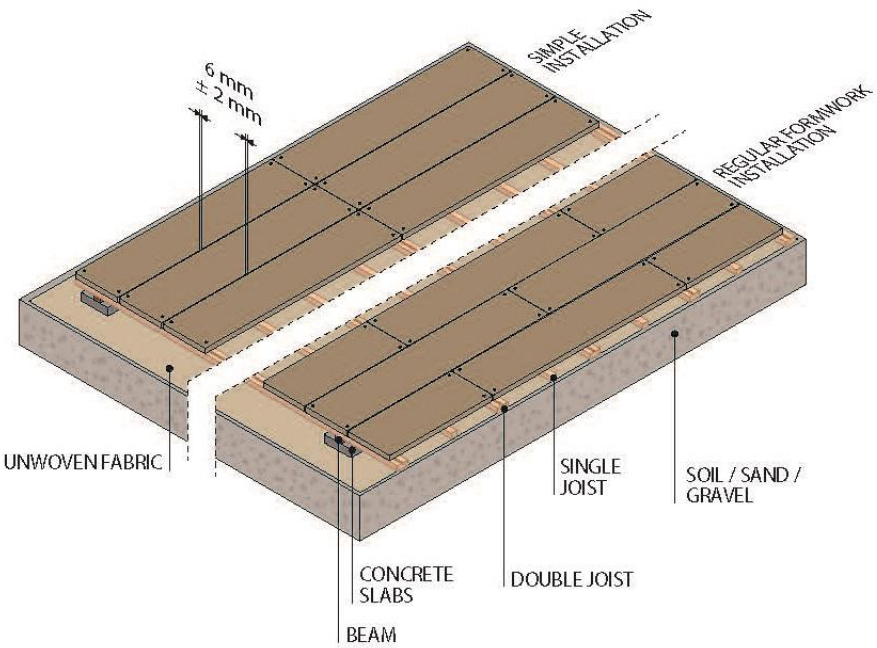

La San Marco Profili srl
Viale Europa 63, 31010 Soligo (TV) ITALY - Tel. +39 0438 980106 r.a - Fax +39 0438 980176 - P.I. 02195230269
info@lasanmarcoprofili.com - www.lasanmarcoprofili.com

FIGURE 20

GAPS BETWEEN HEADS OF BOARDS

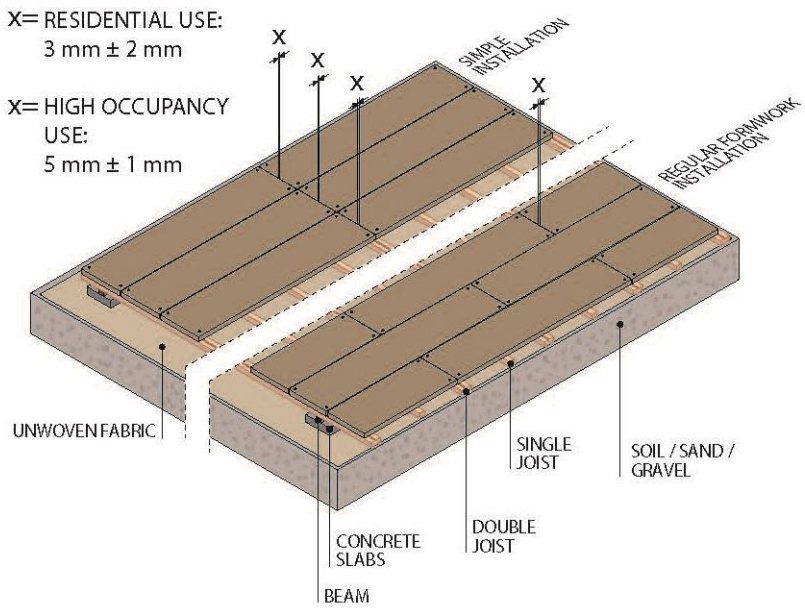

Check the alignment, parallelism and orthogonality of the installation at least every five rows (fig. 21).

FIGURE 21

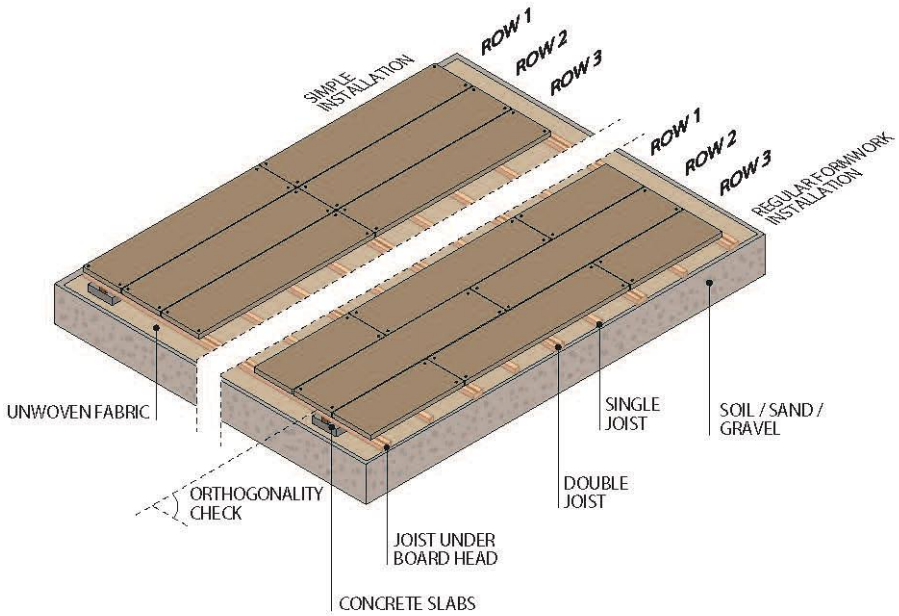

END PIECES

Decking floors, where they do not butt onto vertical structures (i.e. the framework is exposed), should be protected around the edge by wooden end pieces of the same type of wood as the flooring itself. These pieces are screwed onto the framework.

The installation of the end pieces is similar to that of the first boards: either flush with the edge of the floor or recessed under the first board.

If recessed, the piece must be placed 2 cm inside the perimeter of the flooring (fig. 22).

FIGURE 22

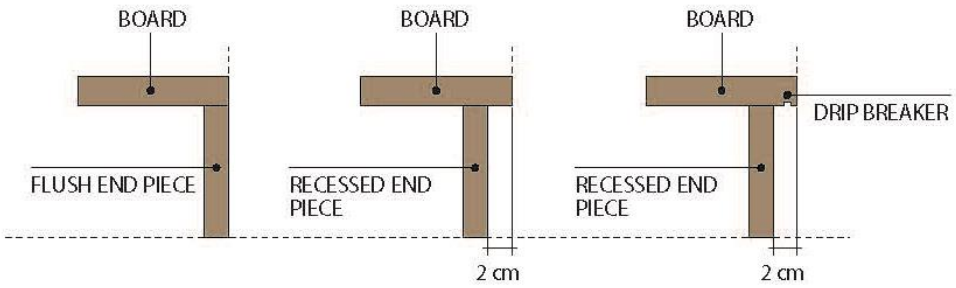

FINAL CLEANING AND REMOVING STAINS

Once the installation is complete, clean the flooring with proper cleaning tools (broom, dust pan, vacuum cleaner and sorted waste bags) to remove any work residue.
Now inspect the surface of the new floor.
Remove any stains with:

- DECK CLEANER detergent (if the boards have been treated with solvent based DECK OIL);

NOTE: Read the instructions given in the product data sheets before you apply the above products.

La San Marco Profili srl
Viale Europa 63, 31010 Soligo (TV) ITALY - Tel. +39 0438 980106 r.a - Fax +39 0438 980176 - P.I. 02195230269
info@lasanmarcoprofili.com - www.lasanmarcoprofili.com

INSTALLATION WITH CLIPS ON UNSTABLE GROUND

PREAMBLE

Installing the decking using concealed clips to secure the boards to the framework is a design choice which effects the look of the finished floor.

We provide steel CLIPS which anchor the boards to the framework joists in a concealed fashion. When using clips, the boards must be milled to accept them (fig. 23 and 24).

FIGURE 23

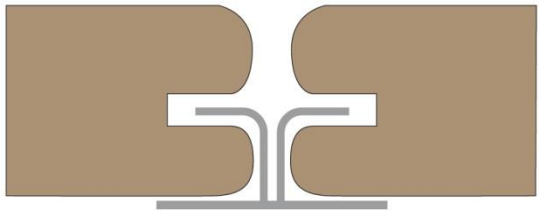

FIGURE 24

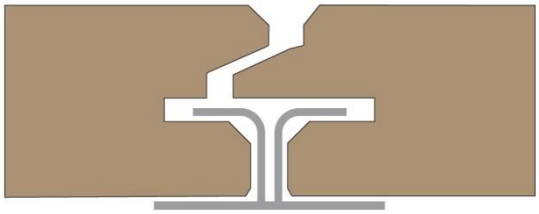

CLIPS

Clips are metal components with fins or hooks which engage the decking boards; they are drilled so that they can be screwed onto the framework joists, whether wooden or aluminium. If you are using aluminium joists, you must use appropriate self-starting stainless steel screws.

The clips are designed to resist the stresses applied to them by the decking boards without deforming; the clips are made from at least 1.5 mm steel (fig. 25).

FIGURE 25

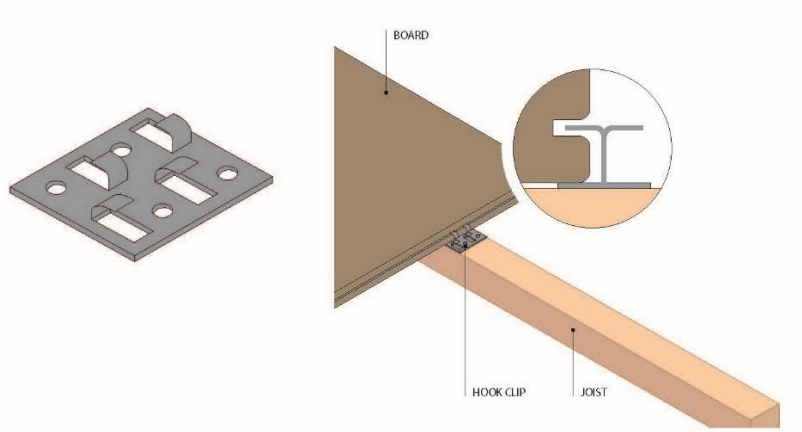

INSTALLATION WITH CLIPS

La San Marco Profili srl
Viale Europa 63, 31010 Soligo (TV) ITALY - Tel. +39 0438 980106 r.a - Fax +39 0438 980176 - P.I. 02195230269
info@lasanmarcoprofili.com - www.lasanmarcoprofili.com

When installing the boards with clips, observe the following precautions:

- Make sure that every clip is secured to its joist (wooden or metal) with the same number of screws as there are holes in the clip itself (fig. 26);
- Make sure the clips are perfectly aligned with the board profiles (fig. 26);

FIGURE 26

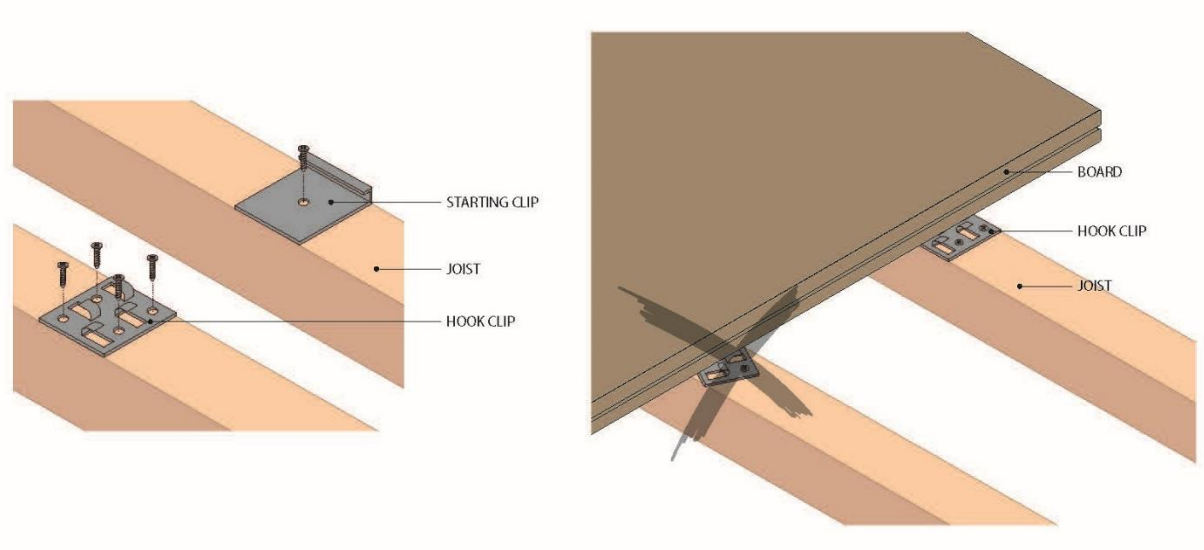

- Use one clip per board for each joist and use two clips where the ends of the boards meet (fig. 27);

FIGURE 27

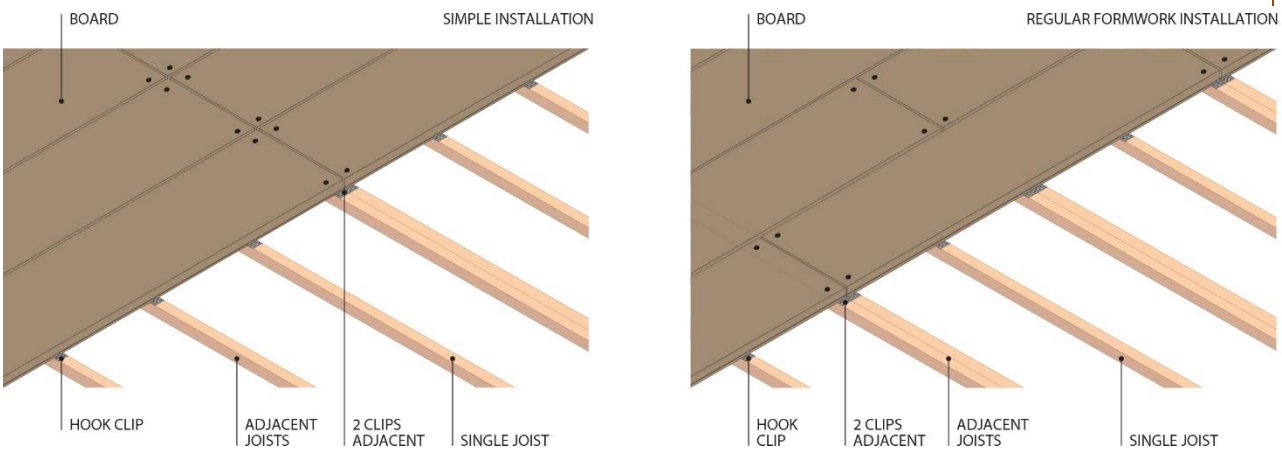

- Use the provided starting clips to secure the decking boards close to walls or other vertical structures, or at the edge of the flooring.

FIGURE 28

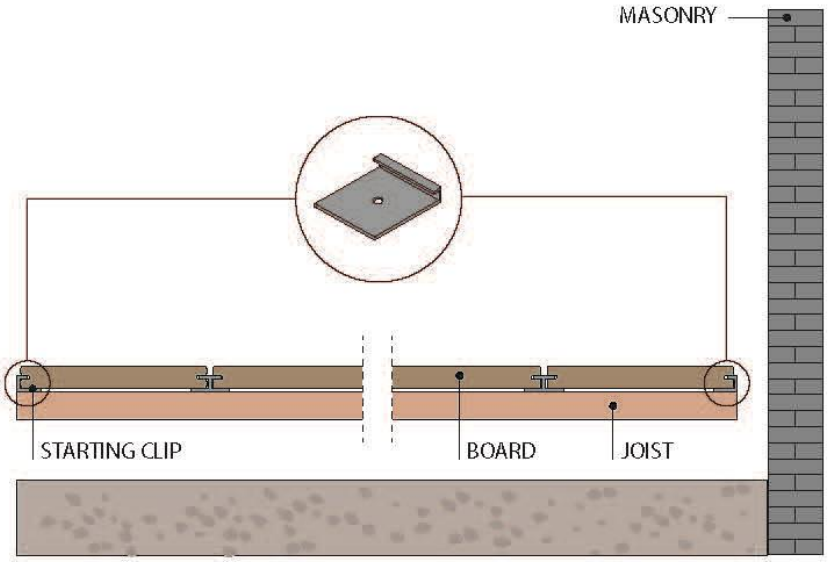

NOTE

Clips are used to secure the boards to the framework in a concealed way. To install the end pieces on the free sides of an elevated floor, use stainless steel screws and conceal the head of the screw with a wooden stud; this is preferable to leaving the head of the screw exposed, since it matches the overall effect of the floor.

INSTALLING DECKING WITH SCREWS OR CLIPS ON STABLE GROUND (concrete screed, existing floor, etc.)

DEFINITION

By "installing wooden decking" we mean the set of operations and procedures required to install the product, from preliminary inspection to impregnation treatments and handover of the finished job.

INSTALLATION WITH SCREWS ON STABLE GROUND

PRELIMINARY INSPECTION AND ASSESSMENT

Have a technician check the stability of the existing structure under the load of the projected new flooring;

Check that the structure is waterproofed and equipped with channels for rainwater run off;

N.B. Any structural calculations will be done at the client's expense to the designer's instructions.

Inspection of the material prior to use:

- dimensional uniformity of the joists;
- level of acceptability of the wooden decking pursuant to UNI 11538-1.

La San Marco Profili srl
Viale Europa 63, 31010 Soligo (TV) ITALY - Tel. +39 0438 980106 r.a - Fax +39 0438 980176 - P.I. 02195230269
info@lasanmarcoprofili.com - www.lasanmarcoprofili.com

PREPARING THE SURFACE FOR INSTALLATION OF THE FRAMEWORK

The surface onto which the framework is to be installed must be checked and prepared so that it can hold the components used to support the framework without deformation and allow water to run off, to prevent the wooden components rotting.

The existing slope must be checked and corrected to ensure effective run off; the slope must be at least **1 cm** per metre (fig. 29).

FIGURE 29

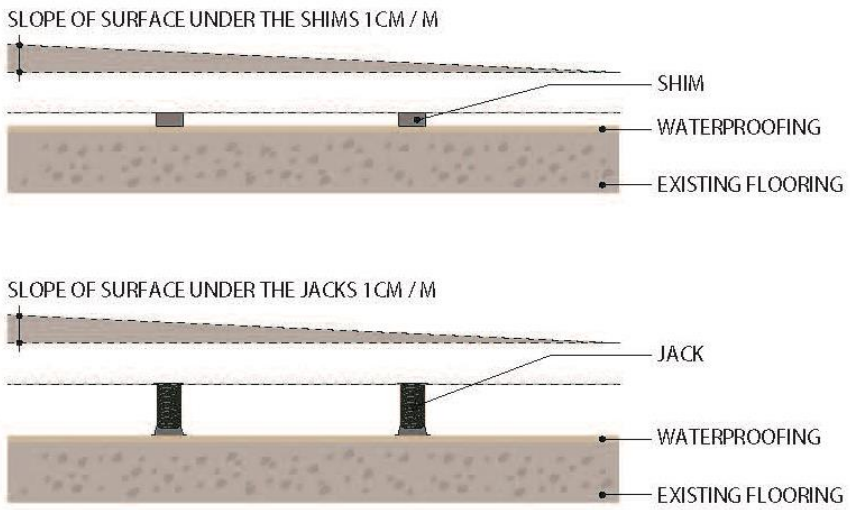

The framework may be made of wood or aluminium.

The framework of beams and joists is normally supported by shims and jacks.

Shims (sometimes several shims) are used to raise the beams and keep them out of run off water.

If the surface is waterproofed with a tarred membrane or other material, the material must not be perforated to anchor the shims. The shims are simply put or glued in place.

Jacks are used to raise the decking by a significant amount over the installation surface, and are used to support the framework.

The spacing between the shims or between the jacks will be determined in relation to the projected mechanical stresses (fig. 30).

La San Marco Profili srl
Viale Europa 63, 31010 Soligo (TV) ITALY - Tel. +39 0438 980106 r.a - Fax +39 0438 980176 - P.I. 02195230269
info@lasanmarcoprofili.com - www.lasanmarcoprofili.com

FIGURE 30

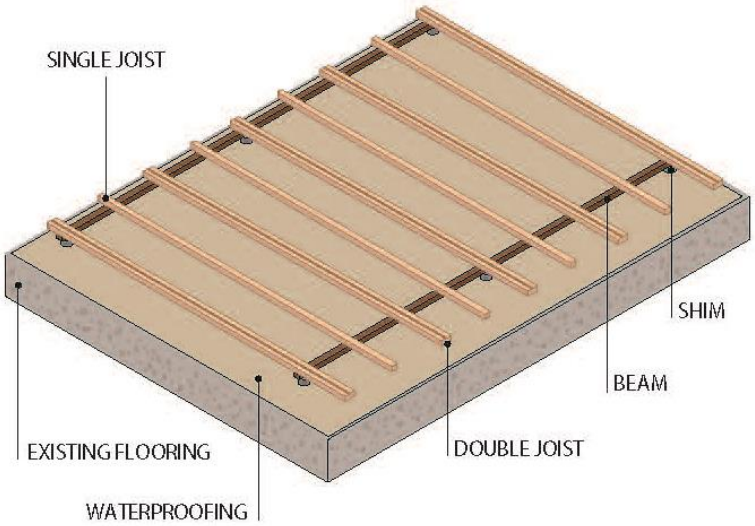

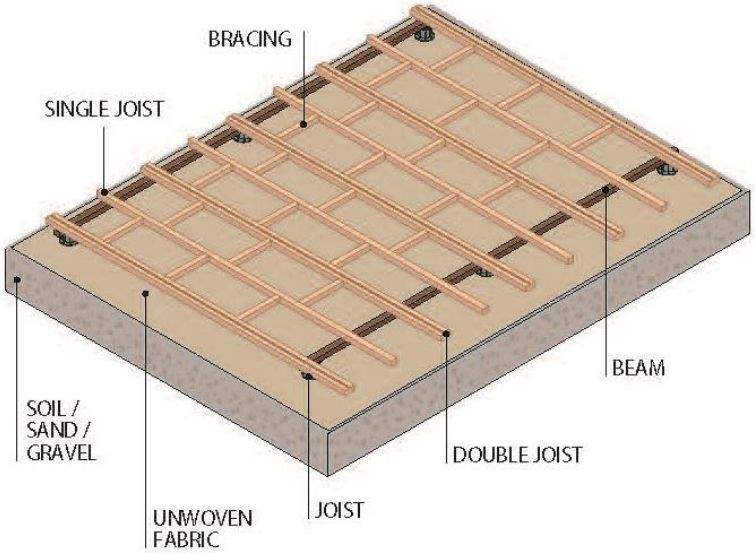

La San Marco Profili srl
Viale Europa 63, 31010 Soligo (TV) ITALY - Tel. +39 0438 980106 r.a - Fax +39 0438 980176 - P.I. 02195230269
info@lasanmarcoprofili.com - www.lasanmarcoprofili.com

INSTALLING THE FRAMEWORK

The framework consists of wooden or aluminium joists and beams, sized in relation to the projected mechanical stresses.

The framework must be locked together to ensure that it is stable and supported by the supporting components (shims or jacks) without anchoring which perforates the waterproofing membrane or insulating layers without work to safeguard their waterproofing and insulation performance.

The standard spacing of joists is 35 cm, or 25 cm if the decking boards are wider than 120 mm (fig. 31 and 33), while the spacing between beams or jacks may not be more than 70 cm (fig. 32 and 34)

FIGURE 31

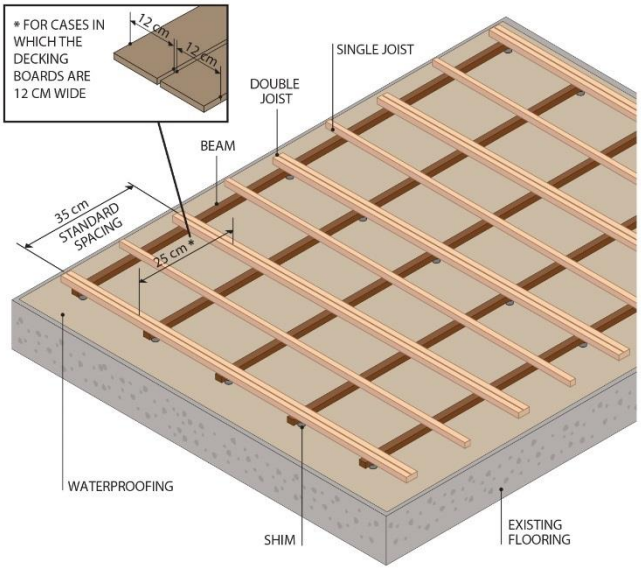

FIGURE 32

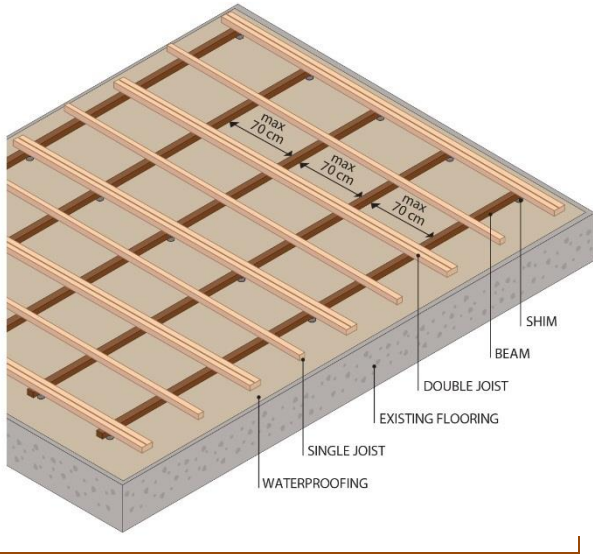

La San Marco Profili srl
Viale Europa 63, 31010 Soligo (TV) ITALY - Tel. +39 0438 980106 r.a - Fax +39 0438 980176 - P.I. 02195230269
info@lasanmarcoprofili.com - www.lasanmarcoprofili.com

FIGURE 33

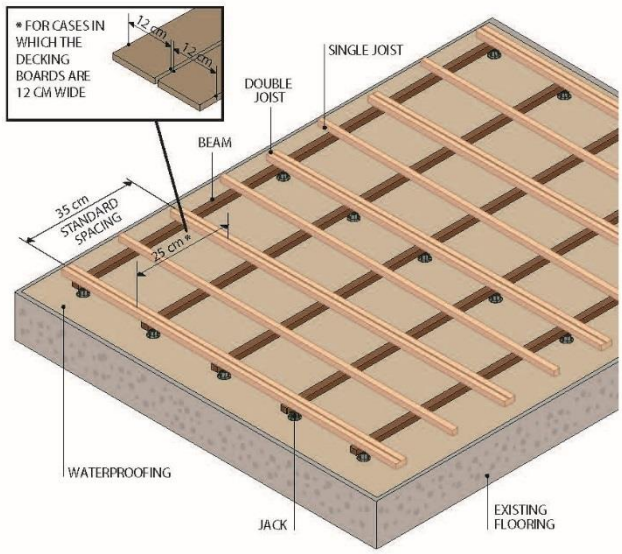

FIGURE 34

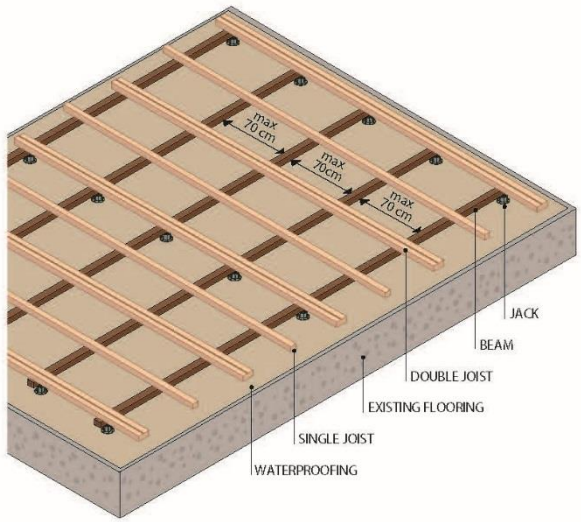

Use stainless steel wood or aluminium screws to secure the framework members, as appropriate.

If you are using jacks, the joists are mounted directly to the jacks, so that beams are not required.

Each jack accepts a single joist for intermediate positions along the boards, while the ends of the boards are supported by pairs of adjacent joists.

If the framework is made of wood, the humidity of the material at the time of installation must be in the range 15 % ± 3 %

INSTALLING THE DECKING

Once the framework has been constructed and the slopes checked, the decking itself can be installed.

1. The first step is to impregnate the boards.

Impregnate the boards with DECK OIL or DECK H2O, depending on whether the design specifies a solvent or water based protective product.
Even after all boards have been impregnated with the product, if the heads of the boards need to be cut to length to fit the installation, the cut parts must be impregnated again.
Instructions given on the product's data sheet must be followed while carrying out the impregnation treatment.

2. The next step is to drill the boards.

The boards must be drilled 2 cm from their sides and from their ends; the drilled holes should be 0.5 mm larger than the diameter of the screws. Use only stainless steel screws.

The holes must be countersunk to ensure that, when they are inserted, the heads of the screws are slightly below the level of the decking itself. If screws concealed with studs are to be used, the countersinking must be sufficient to ensure that the studs are flush with the level of the boards when they are inserted (fig. 35).

FIGURE 35

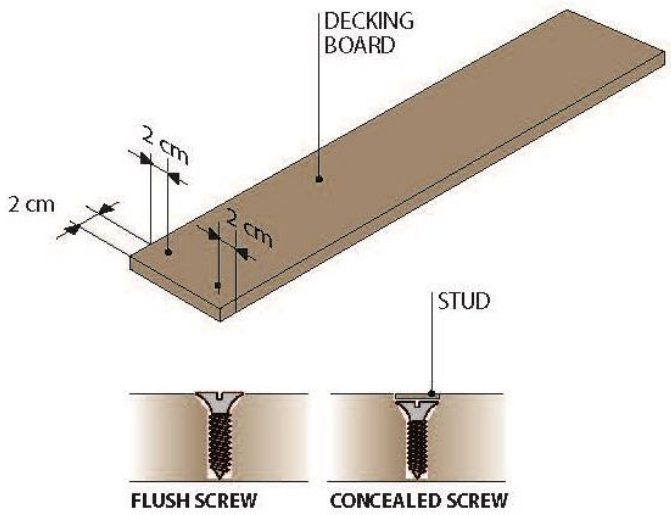

La San Marco Profili srl
Viale Europa 63, 31010 Soligo (TV) ITALY - Tel. +39 0438 980106 r.a - Fax +39 0438 980176 - P.I. 02195230269
info@lasanmarcoprofili.com - www.lasanmarcoprofili.com

3. The third step is to secure the boards and build up the flooring surface.

Install the first boards, taking care that they are not curved and as uniform as possible; it should be noted that wood is a natural material which may not be perfectly straight lengthwise (curved board) (fig. 36)

FIGURE 36

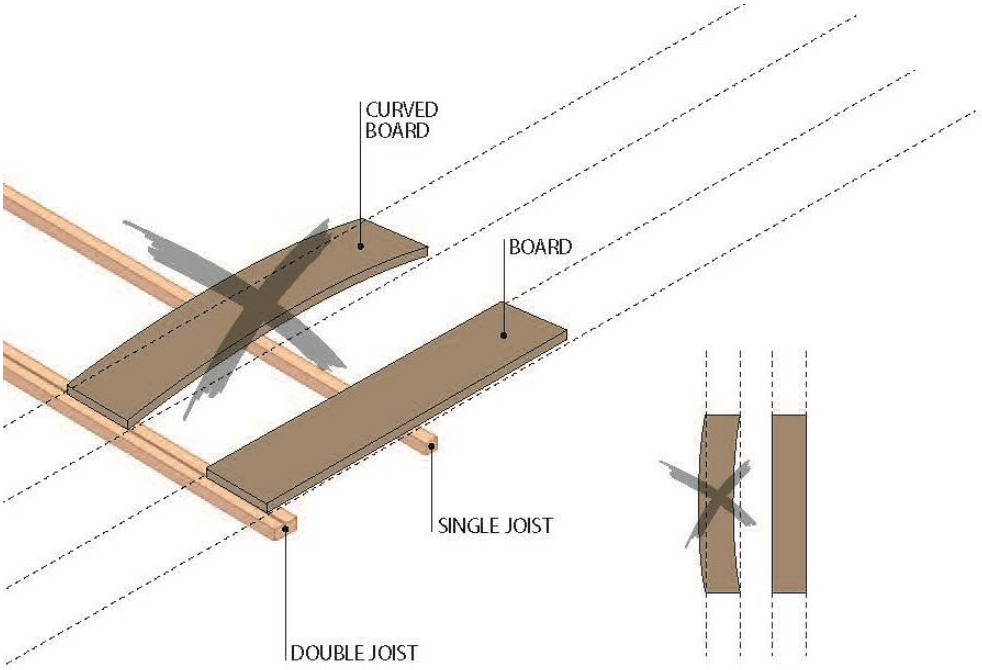

If the decking floor is butted against a vertical structure (a wall) on one or more sides, make sure to leave around 20mm space between the first board and the wall itself for water to run off (whether the board is flush with the joist or not) and install the beams in such a way that they do not impede run off (fig. 37, 38, 39, 40).

La San Marco Profili srl
Viale Europa 63, 31010 Soligo (TV) ITALY - Tel. +39 0438 980106 r.a - Fax +39 0438 980176 - P.I. 02195230269
info@lasanmarcoprofili.com - www.lasanmarcoprofili.com

FIGURE 37

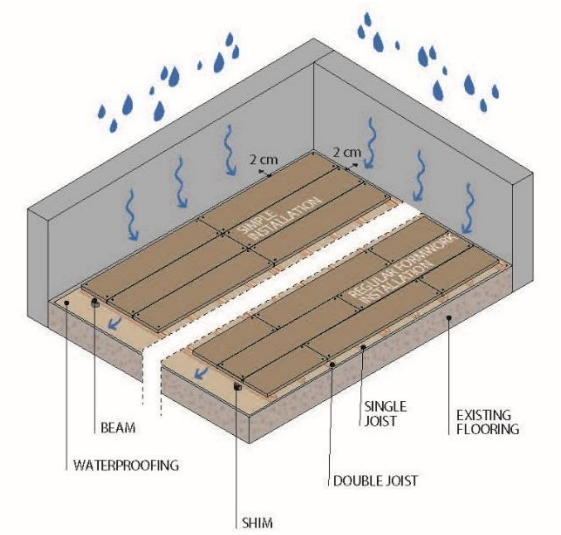

FIGURE 38

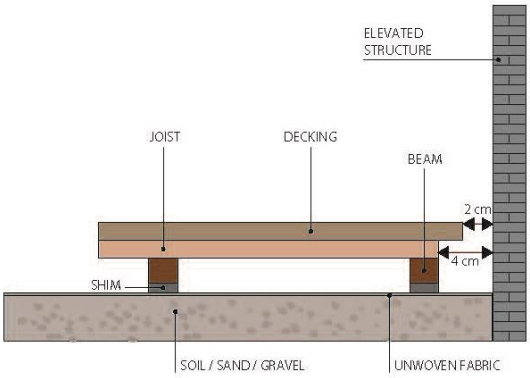

FIGURE 39

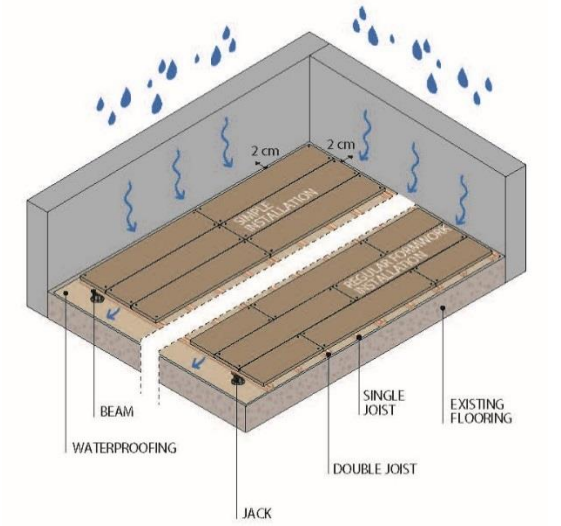

FIGURE 40

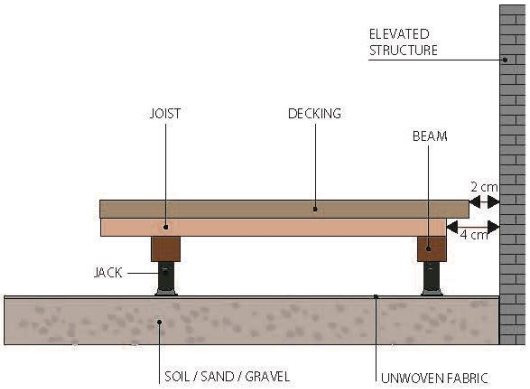

La San Marco Profili srl
Viale Europa 63, 31010 Soligo (TV) ITALY - Tel. +39 0438 980106 r.a - Fax +39 0438 980176 - P.I. 02195230269
info@lasanmarcoprofili.com - www.lasanmarcoprofili.com

If the decking floor has free sides, i.e. not butted against a wall, the first board must be installed in line with the end piece. The end piece may be flush with the edge of the first board or recessed under it (fig. 41).

FIGURE 41

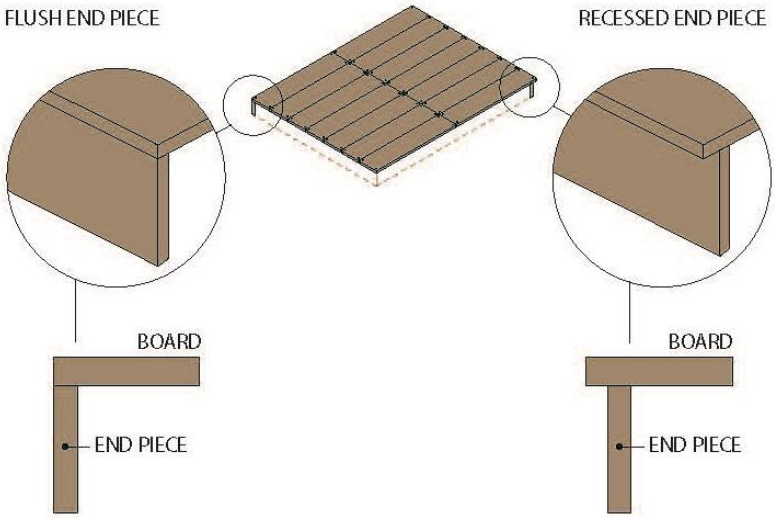

For decking floors with sides butted against other flooring structures, make sure to leave a gap of at least 10 mm between the first board and the adjacent flooring, to allow water to run off (fig. 42).

FIGURE 42

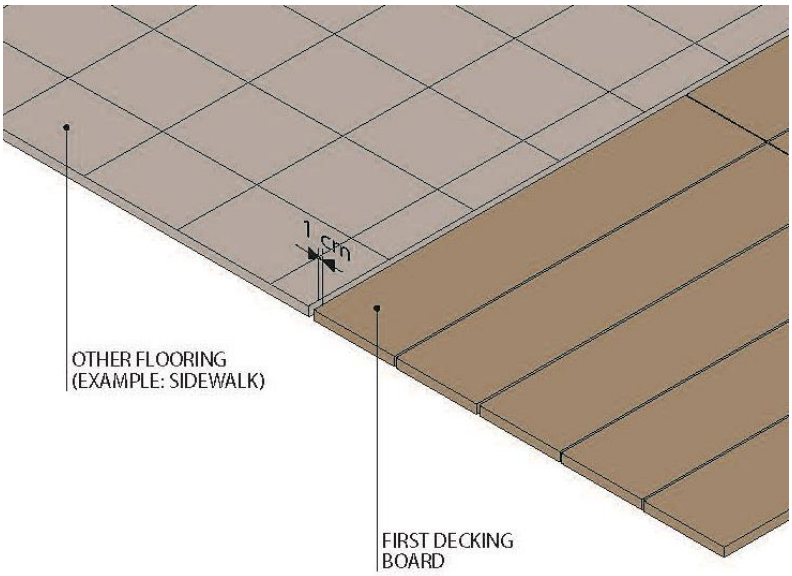

La San Marco Profili srl
Viale Europa 63, 31010 Soligo (TV) ITALY - Tel. +39 0438 980106 r.a - Fax +39 0438 980176 - P.I. 02195230269
info@lasanmarcoprofili.com - www.lasanmarcoprofili.com

INSTALLING THE BOARDS AFTER THE FIRST ONE

When installing the successive boards, choose the straightest and most even ones possible to ensure uniform alignment and spacing between them, to the extent that this is possible in light of the fact that wood is a natural material which may not be perfectly straight lengthwise (curved board). The decking boards must be spaced by at least 6 mm ± 2 mm longitudinally and **3** mm ± 2 mm between their ends for residential applications, and 5 mm ± 1 for high occupancy applications (fig. 43 and 44).

FIGURE 43

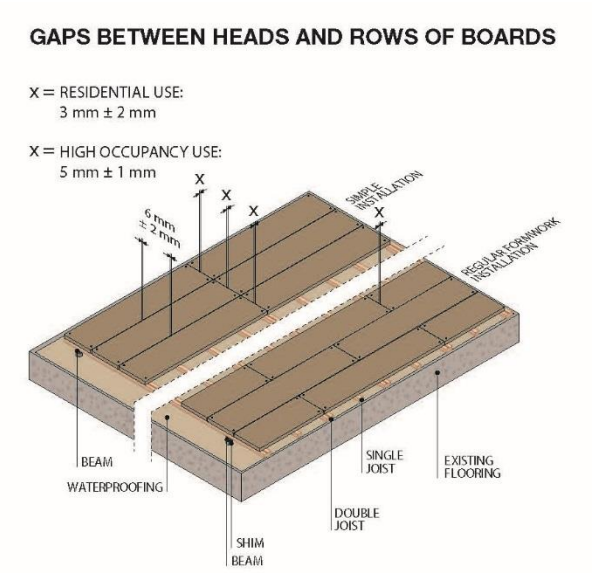

FIGURE 44

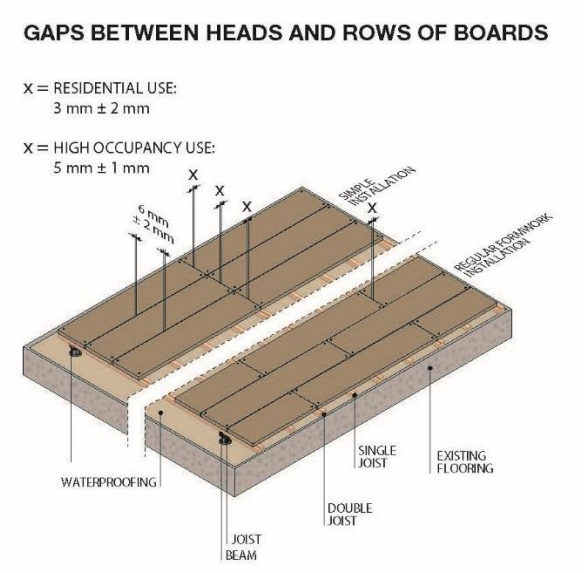

Check the alignment, parallelism and orthogonality of the installation at least every five rows (fig. 45).

FIGURE 45

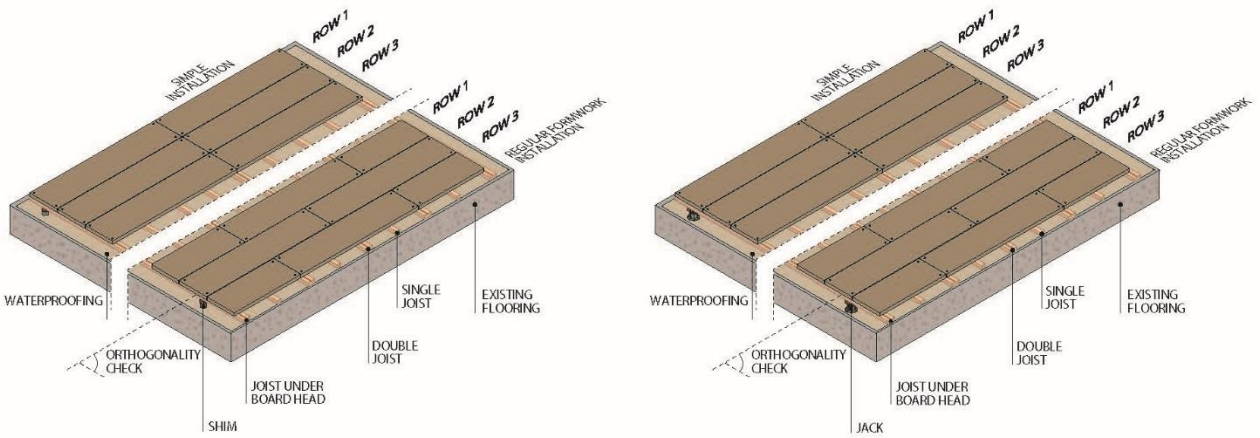

La San Marco Profili srl
Viale Europa 63, 31010 Soligo (TV) ITALY - Tel. +39 0438 980106 r.a - Fax +39 0438 980176 - P.I. 02195230269
info@lasanmarcoprofili.com - www.lasanmarcoprofili.com

END PIECES

Decking floors, where they do not butt onto vertical structures (i.e. the framework is exposed), should be protected around the edge by wooden end pieces of the same type of wood as the flooring itself. These pieces are screwed onto the framework.

The installation of the end pieces is similar to that of the first boards: either flush with the edge of the floor or recessed under the first board.

If recessed, the piece must be placed 2 cm inside the perimeter of the flooring (fig. 46).

FIGURE 46

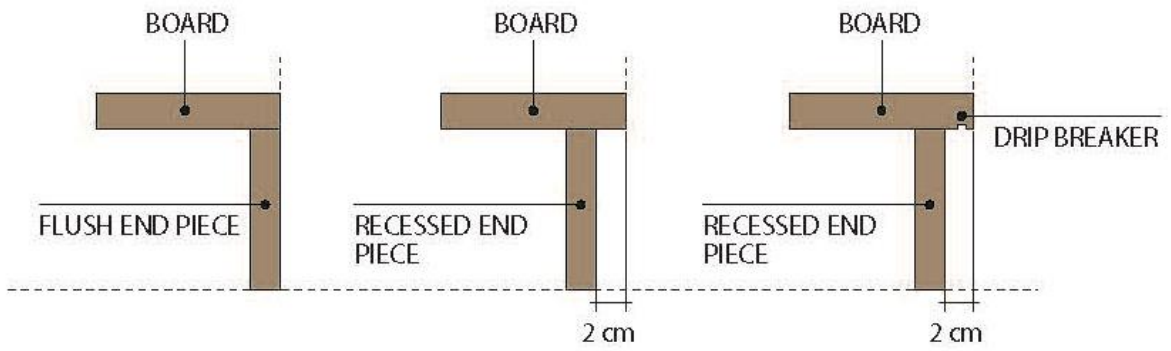

FINAL CLEANING AND REMOVING STAINS

Once the installation is complete, clean the flooring with proper cleaning tools (broom, dust pan, vacuum cleaner and sorted waste bags) to remove any work residue.
Now inspect the surface of the new floor.
Remove any stains with:

- DECK CLEANER detergent (if the boards have been treated with solvent based DECK OIL);
- XYZ detergent (if the boards have been treated with water based DECK H2O);

NOTE: Read the instructions given in the product data sheets before you apply the above products.

La San Marco Profili srl
Viale Europa 63, 31010 Soligo (TV) ITALY - Tel. +39 0438 980106 r.a - Fax +39 0438 980176 - P.I. 02195230269
info@lasanmarcoprofili.com - www.lasanmarcoprofili.com

INSTALLATION WITH CLIPS ON STABLE GROUND

PREAMBLE

Installing a decking floor with the screws which secure the boards to the underlying framework exposed or concealed by studs is a design choice which affects the overall look of the floor, as does the use of a completely concealed mounting system.
We provide steel CLIPS which anchor the boards to the framework joists in a concealed fashion.
When using clips, the boards must be milled to accept them (fig. 23 and 24).

FIGURE 23

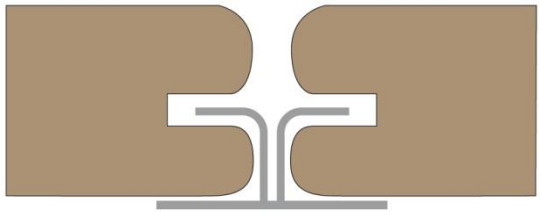

FIGURE 24

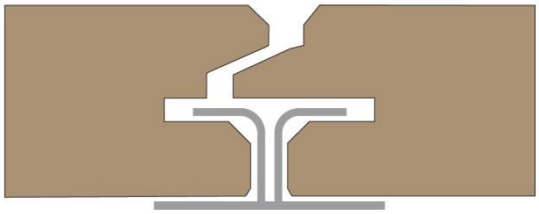

CLIPS

Clips are metal components with fins or hooks which engage the decking boards; they are drilled so that they can be screwed onto the framework joists, whether wooden or aluminium. If you are using aluminium joists, you must use appropriate self-starting stainless steel screws.
The clips are designed to resist the stresses applied to them by the decking boards without deforming; the clips are made from at least 1.5 mm steel (fig. 25).

FIGURE 25

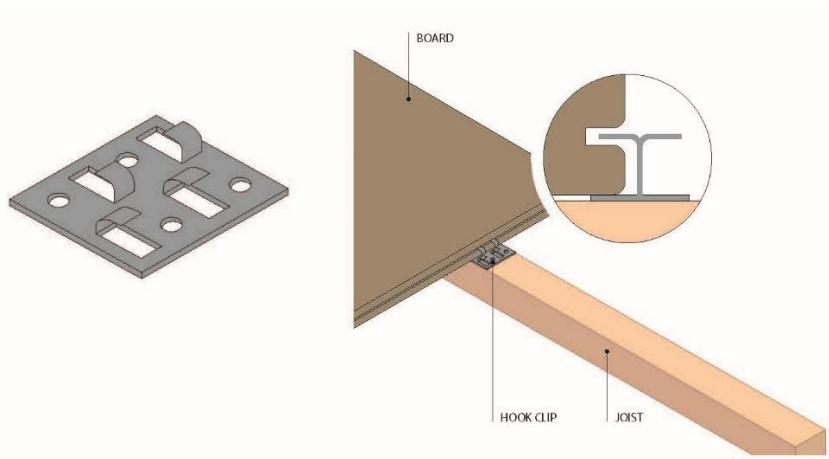

La San Marco Profili srl
Viale Europa 63, 31010 Soligo (TV) ITALY - Tel. +39 0438 980106 r.a - Fax +39 0438 980176 - P.I. 02195230269
info@lasanmarcoprofili.com - www.lasanmarcoprofili.com

INSTALLATION WITH CLIPS

When installing the boards with clips, observe the following precautions:

- Make sure that every clip is secured to its joist (wooden or metal) with the same number of screws as there are holes in the clip itself (fig. 26);
- Make sure the clips are perfectly aligned with the board profiles (fig. 26);

FIGURE 26

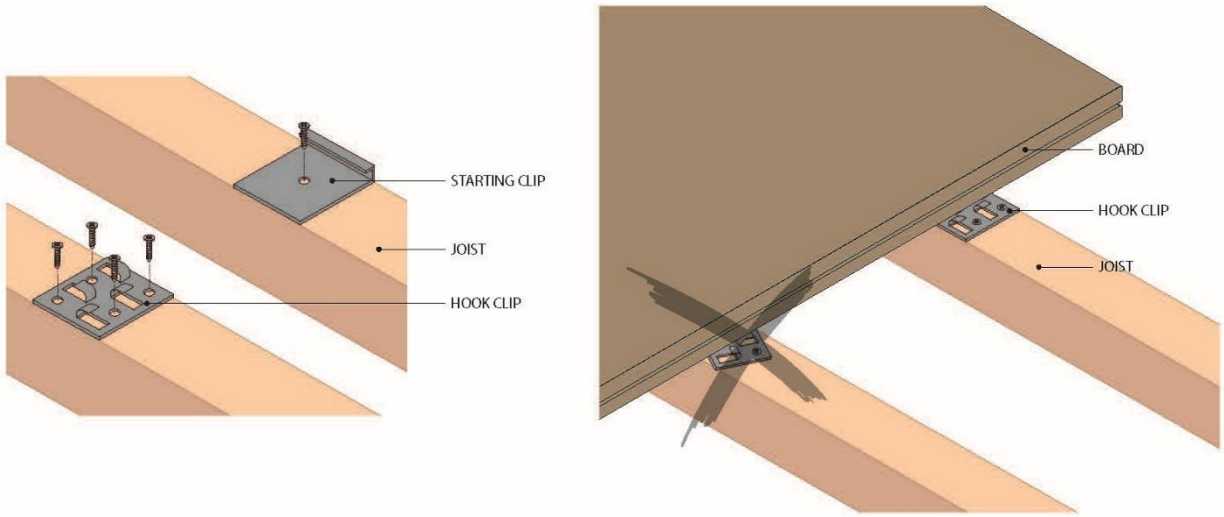

- Use one clip per board for each joist and use two clips where the ends of the boards meet (fig. 27);

FIGURE 27

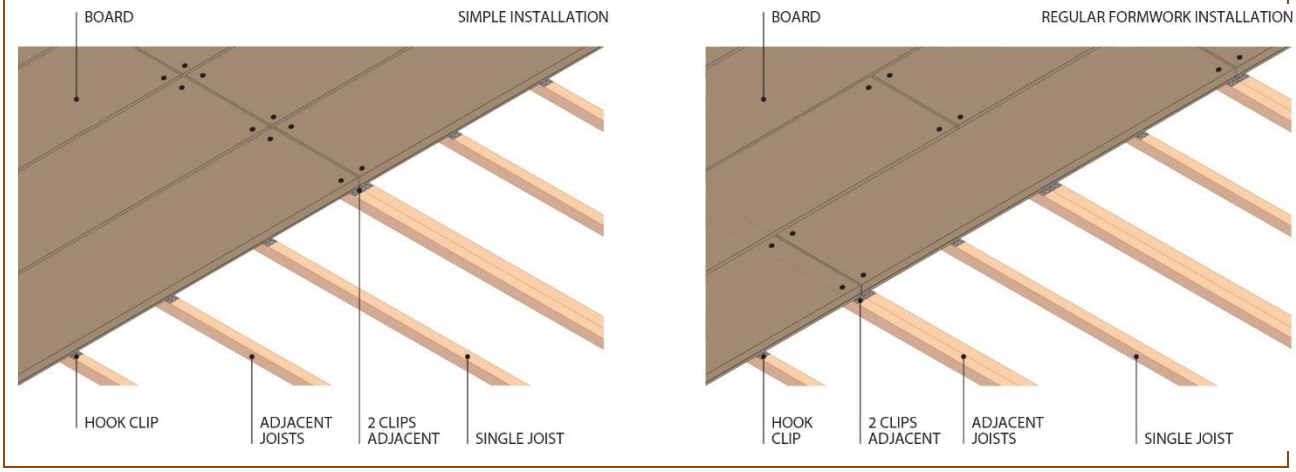

La San Marco Profili srl
Viale Europa 63, 31010 Soligo (TV) ITALY - Tel. +39 0438 980106 r.a - Fax +39 0438 980176 - P.I. 02195230269
info@lasanmarcoprofili.com - www.lasanmarcoprofili.com

- Use the provided starting clips to secure the decking boards close to walls or other vertical structures, or at the edge of the flooring.

FIGURE 28

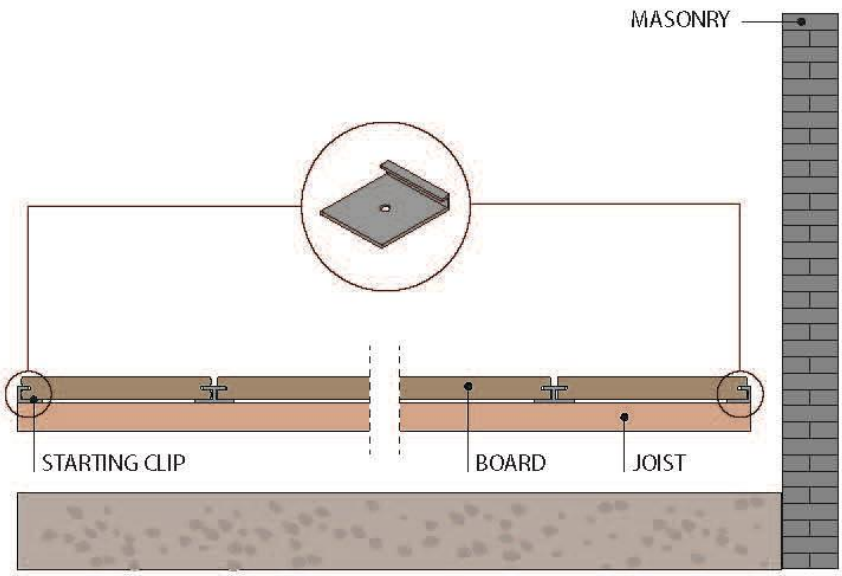

-

NOTE

Clips are used to secure the boards to the framework in a concealed way. To install the end pieces on the free sides of an elevated floor, use stainless steel screws and conceal the head of the screw with a wooden stud; this is preferable to leaving the head of the screw exposed, since it matches the overall effect of the floor.

La San Marco Profili srl
Viale Europa 63, 31010 Soligo (TV) ITALY - Tel. +39 0438 980106 r.a - Fax +39 0438 980176 - P.I. 02195230269
info@lasanmarcoprofili.com - www.lasanmarcoprofili.com

INSTALLING THE DECKING WITH THE EASYCHANGE SYSTEM

INSTALLATION WITH THE EASY CHANGE FRAMEWORK ON UNSTABLE AND STABLE GROUND

Depending on the type of ground onto which the wood is to be installed, refer to the instructions "INSTALLATION WITH CLIPS ON UNSTABLE GROUND (natural soil, sand, gravel, etc.)" or "INSTALLATION WITH CLIPS ON STABLE GROUND (concrete screed, existing flooring, etc.)".

It should be noted that the clips are pre-installed to the Easychange framework (see below).

La San Marco Profili srl
Viale Europa 63, 31010 Soligo (TV) ITALY - Tel. +39 0438 980106 r.a - Fax +39 0438 980176 - P.I. 02195230269
info@lasanmarcoprofili.com - www.lasanmarcoprofili.com

INITIAL ASSESSMENT

The frame work should always be assembled in a staggered pattern, so that no two joints are aligned with each other

FIGURE EC1

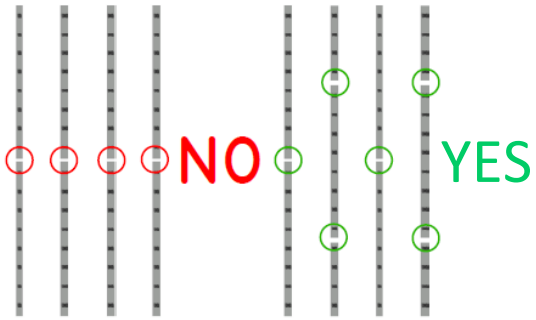

In some cases, the framework may need to be reinforced with additional 40cm members at the joints. This is particularly important when the framework assembly cannot be staggered as above

FIGURE EC2

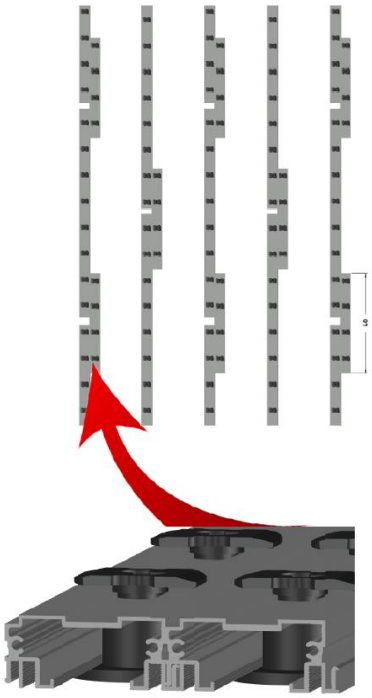

La San Marco Profili srl
Viale Europa 63, 31010 Soligo (TV) ITALY - Tel. +39 0438 980106 r.a - Fax +39 0438 980176 - P.I. 02195230269
info@lasanmarcoprofili.com - www.lasanmarcoprofili.com

INSTALLATION: FIRST STEP

Shorten the framework in relation to the length of the first board and install the nylon starting clip (this is used at the start and end of the installation).

FIGURE EC3

Turn the framework over and remove the cap on the Easychange clip as shown in figure EC4. Remove the two retainers by turning the butterfly clip by hand to release it from its recess.

FIGURE EC4

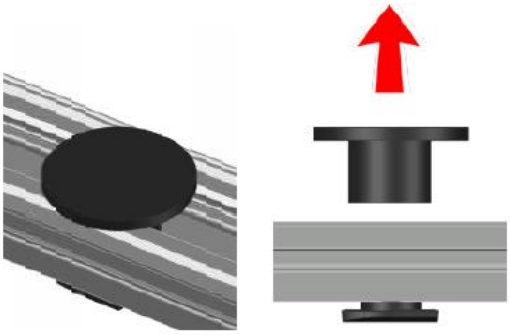

Cut the framework to the right size, using a board to measure it, then insert the base of the starting clip into the bottom of the framework, fit the top section and screw it into the framework.

FIGURE EC5

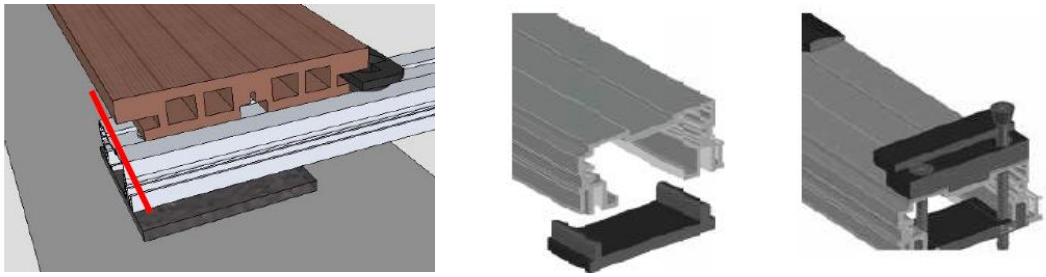

La San Marco Profili srl
Viale Europa 63, 31010 Soligo (TV) ITALY - Tel. +39 0438 980106 r.a - Fax +39 0438 980176 - P.I. 02195230269
info@lasanmarcoprofili.com - www.lasanmarcoprofili.com

Complete the assembly with the start end clip, and cut the board to the remaining length. If the flooring does not finish with a complete board, cut the board to length and secure it with a screw or adhesive for outdoors applications.

To align the frameworks in parallel, push the first board at the edge into the clips with your foot. Then push the other boards onto the framework, thus aligning them in parallel.
Once everything is aligned, screw the Easy Change bars onto the primary framework without overtightening them. Take care not to bend them! Which type of Stop you should use for the assembly depends on the type of existing basis.

FIGURE EC2

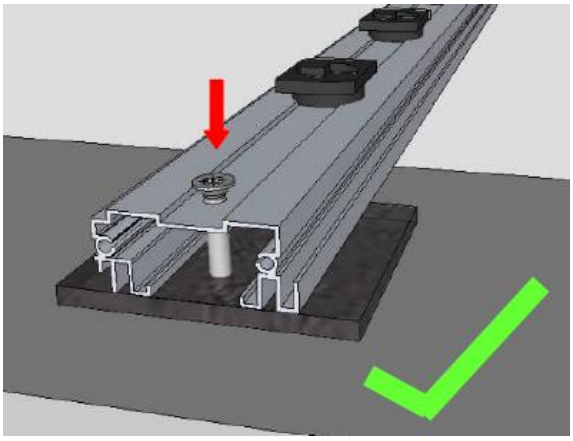

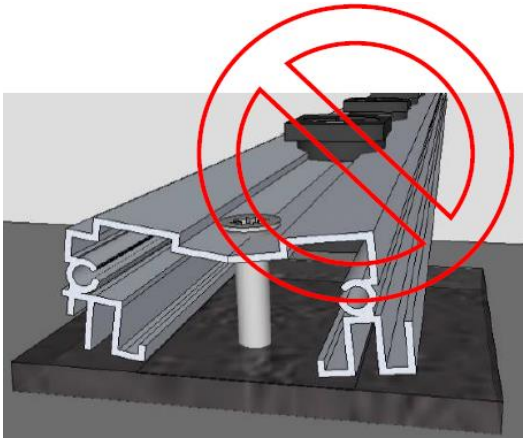

To facilitate the alignment, place the first board against the edge, position all clips in parallel at 90° and then install the first board.

La San Marco Profili srl
Viale Europa 63, 31010 Soligo (TV) ITALY - Tel. +39 0438 980106 r.a - Fax +39 0438 980176 - P.I. 02195230269
info@lasanmarcoprofili.com - www.lasanmarcoprofili.com

INSTALLING THE SUBSEQUENT BOARDS AND USING THE WRENCH

Now install the other boards

FIGURE EC3

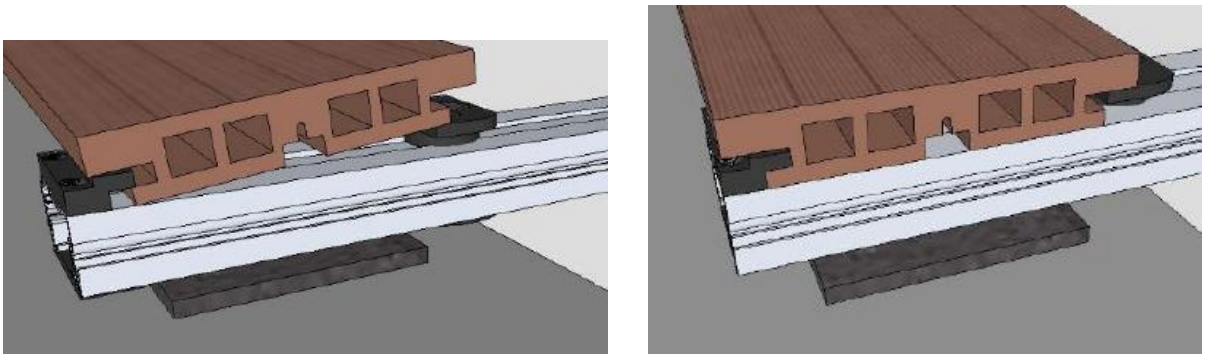

Use the assembly wrench to turn the clips 90° and secure the boards to the framework. This means you can remove the boards at any time.

FIGURE EC4

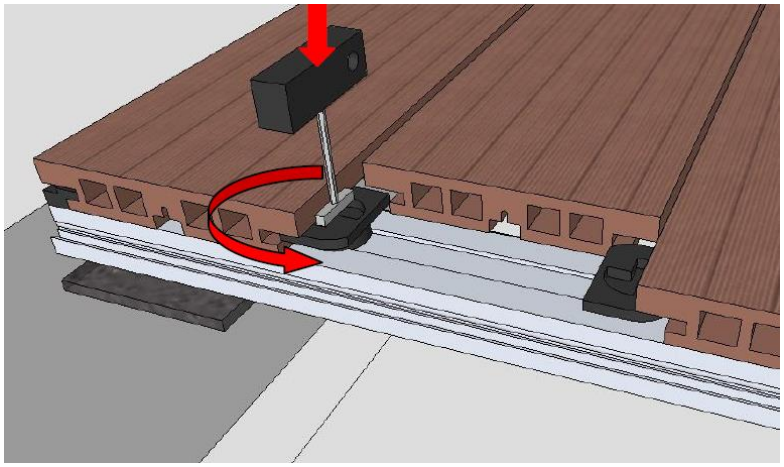

Secure the last board with the starting clip.

La San Marco Profili srl
Viale Europa 63, 31010 Soligo (TV) ITALY - Tel. +39 0438 980106 r.a - Fax +39 0438 980176 - P.I. 02195230269
info@lasanmarcoprofili.com - www.lasanmarcoprofili.com

INSTALLING THE DECKING WITH THE IFLY SYSTEM

INSTALLATION WITH THE IFLY FRAMEWORK ON UNSTABLE AND STABLE GROUND

Depending on the type of ground onto which the wood is to be installed, refer to the instructions "INSTALLATION WITH CLIPS ON UNSTABLE GROUND (natural soil, sand, gravel, etc.)" or "INSTALLATION WITH CLIPS ON STABLE GROUND (concrete screed, existing flooring, etc.)".

Obviously you must bear the particular structure of the IFLY clips in mind (see below)

La San Marco Profili srl
Viale Europa 63, 31010 Soligo (TV) ITALY - Tel. +39 0438 980106 r.a - Fax +39 0438 980176 - P.I. 02195230269
info@lasanmarcoprofili.com - www.lasanmarcoprofili.com

INITIAL ASSESSMENT

The structure's beams must be at least 5 cm wide to allow the clips to be mounted properly.

FIGURE FL1

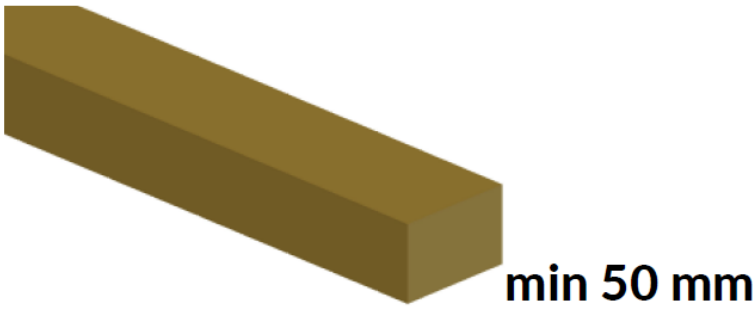

The length of the screws depends on the thickness of the beams.

FIGURE FL2

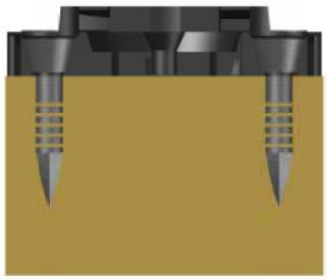

To install the start end clip properly, first drill the screw hole with a fine bit and then screw it in.

FIGURE FL3

La San Marco Profili srl
Viale Europa 63, 31010 Soligo (TV) ITALY - Tel. +39 0438 980106 r.a - Fax +39 0438 980176 - P.I. 02195230269
info@lasanmarcoprofili.com - www.lasanmarcoprofili.com

In some cases you may need to predrill all clips. Whether this is necessary depends on the material of the framework.

FIGURE FL4

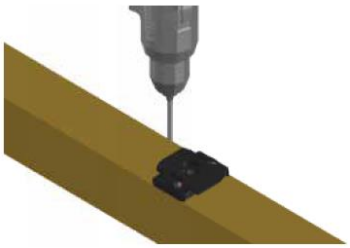

The IFLY clips install with at least two screws. You can use the two end positions, but the best solution is to secure the clip with the centre screw and the right or left screw

FIGURE FL5

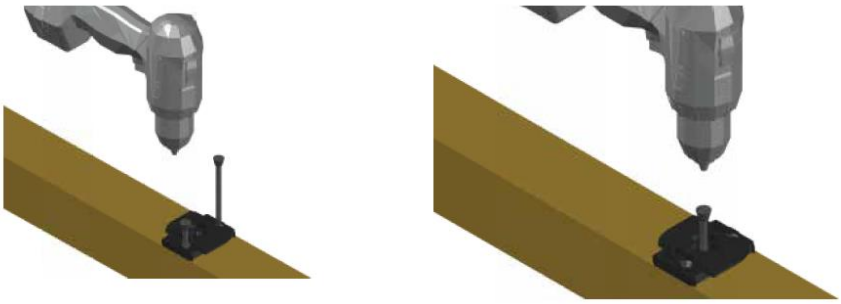

La San Marco Profili srl
Viale Europa 63, 31010 Soligo (TV) ITALY - Tel. +39 0438 980106 r.a - Fax +39 0438 980176 - P.I. 02195230269
info@lasanmarcoprofili.com - www.lasanmarcoprofili.com

Correct installation of the IFLY clip

FIGURE FL6

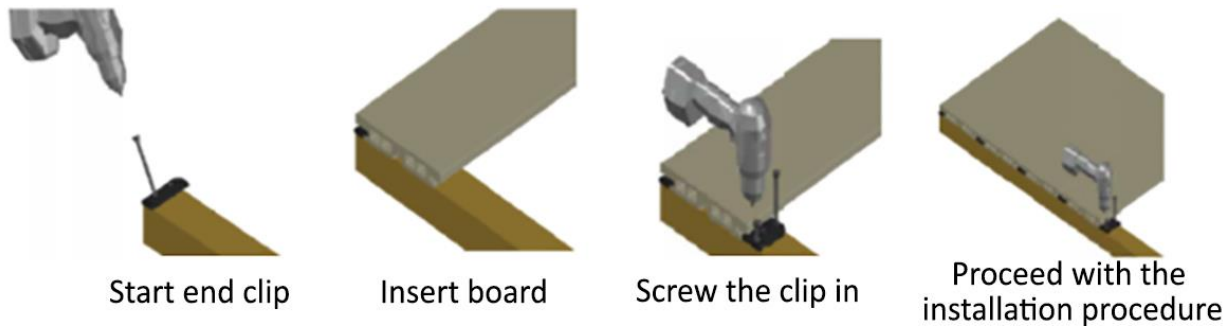

Make sure that the side with the arrows is always under the board!

FIGURE FL7

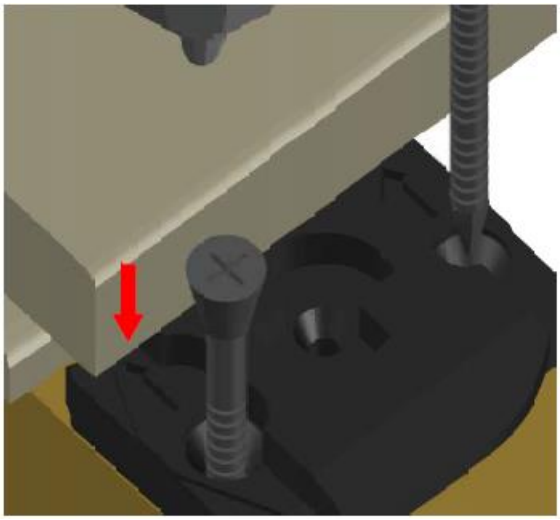

Complete the assembly with the start end clip, and cut the board to the remaining length. If the flooring does not finish with a complete board, cut the board to length and secure it with a screw or adhesive for outdoors applications.

La San Marco Profili srl
Viale Europa 63, 31010 Soligo (TV) ITALY - Tel. +39 0438 980106 r.a - Fax +39 0438 980176 - P.I. 02195230269
info@lasanmarcoprofili.com - www.lasanmarcoprofili.com

The EasyChange wrench is used to lock and release the board during and after installation. Make sure you do not lose it.

FIGURE FL8

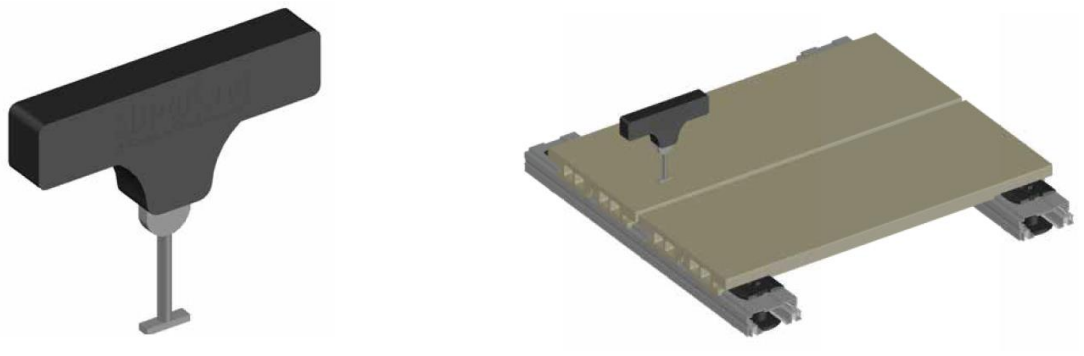

Turn the EasyChange wrench counterclockwise to release the board.

FIGURE FL9

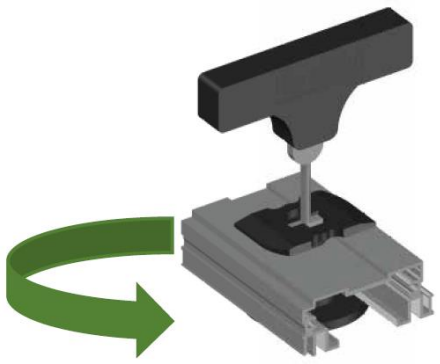

Turn the EasyChange wrench clockwise to lock the board.

FIGURE FL10

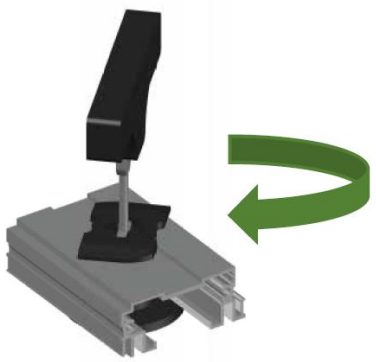

La San Marco Profili srl
Viale Europa 63, 31010 Soligo (TV) ITALY - Tel. +39 0438 980106 r.a - Fax +39 0438 980176 - P.I. 02195230269
info@lasanmarcoprofili.com - www.lasanmarcoprofili.com

INSTALLING DECK TILES

By "installing wooden deck tiles" we mean the set of operations and procedures required to install the product, from preliminary inspection to finishing treatments and handover of the finished job.

PRELIMINARY INSPECTION AND ASSESSMENT

Inspection of the type of ground in question, with reference to its density and stability in relation to the design load.
Check that the natural slope will allow rain water to run off.
Check the height of the flooring (walkover surface) over the ground
Inspection of the material prior to use:

- dimensional uniformity
- presence of material defects

PREPARING THE SURFACE FOR THE INSTALLATION OF THE DECK TILE FLOOR

The surface onto which the deck tile floor is to be installed must be prepared to prevent differential settling which results in an uneven flooring surface.
The floor must be installed above the installation surface to allow water to run off underneath it without contacting the floor, to prevent the wooden components rotting.

PREPARING THE SURFACE FOR INSTALLATION ON UNSTABLE GROUND

If the installation surface is unstable, such as natural soil, sand or gravel, special attention must be paid to preparing it so that it can support the pre-assembled platform / deck tile floor; these evaluations must be made during the design phase.
If the surface is made of sand, it must be abundantly wetted and compacted to form a dense, flat surface capable of supporting the cement slabs, themselves size to bear the projected load, which form the structural supports for the deck tile framework; the slabs support and distribute the loads transmitted by the disks or jacks.
It is essential that you install a layer of unwoven fabric to prevent plants growing, where the unstable ground is prone to this occurring.
It is important that the surface have a slope to allow rain water to run off without puddling; the slope should be of the order of 1 cm per metre (fig. 47, 48, 49)

FIGURE 47

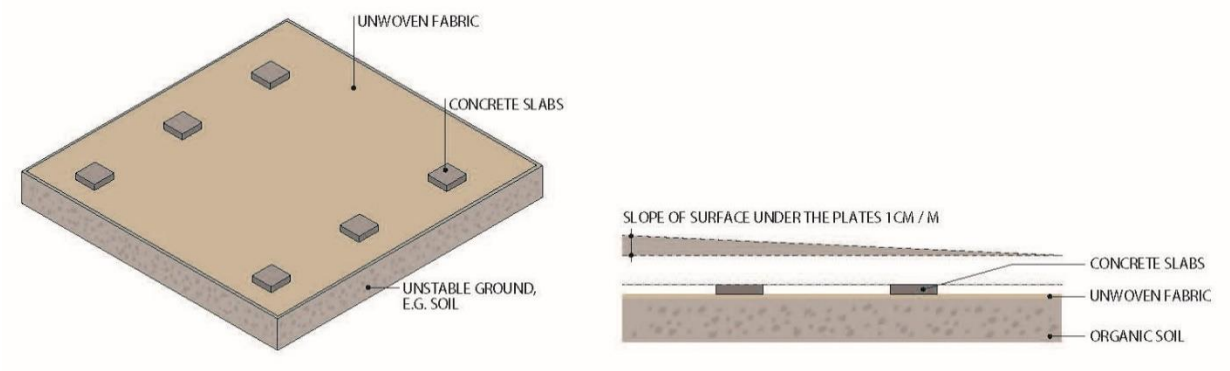

FIGURE 48

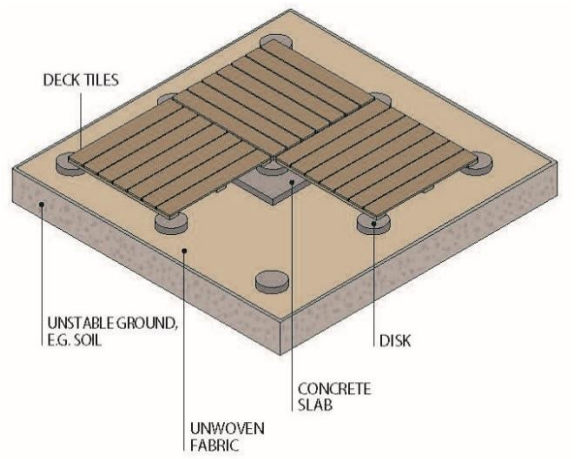

FIGURE 49

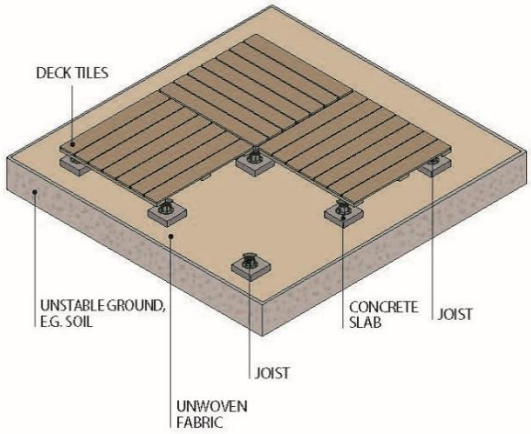

La San Marco Profili srl
Viale Europa 63, 31010 Soligo (TV) ITALY - Tel. +39 0438 980106 r.a - Fax +39 0438 980176 - P.I. 02195230269
info@lasanmarcoprofili.com - www.lasanmarcoprofili.com

PREPARING THE SURFACE FOR INSTALLATION ON STABLE GROUND

If the installation surface is stable, such as a screed or existing floor, first check that the slope is adequate to allow effective run off and that there are proper draining/collection points, then install the disks or jacks which support the tiles directly on the surface, taking care not to perforate the waterproofing membrane (if any) (fig. 50, 51)

FIGURE 50

EXAMPLE OF INSTALLATION ON WATERPROOFED MEMBRANE OVER SCREED

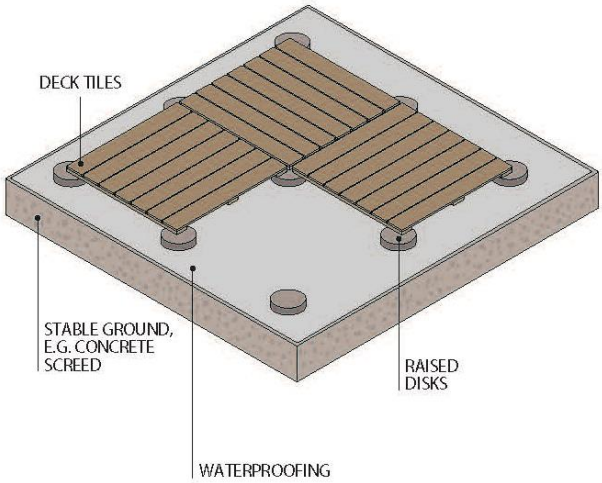

FIGURE 51

EXAMPLE OF INSTALLATION ON EXISTING OUTDOORS FLOORING

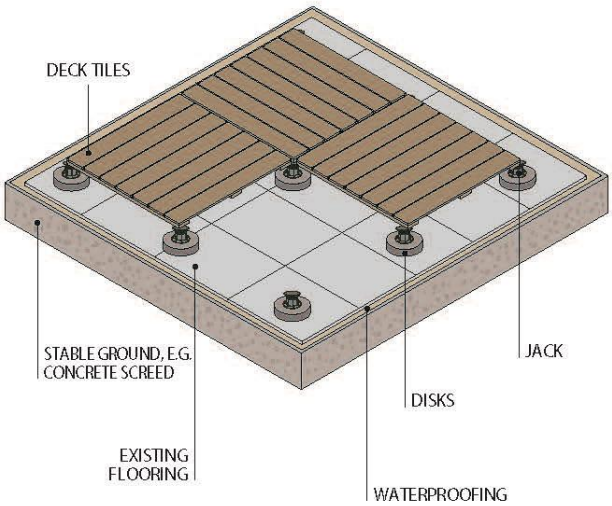

La San Marco Profili srl
Viale Europa 63, 31010 Soligo (TV) ITALY - Tel. +39 0438 980106 r.a - Fax +39 0438 980176 - P.I. 02195230269
info@lasanmarcoprofili.com - www.lasanmarcoprofili.com

INSTALLING THE DECK TILE SUPPORTS

The deck tiles are shaped and structured to support each other and to be supported by vertical spacers, whether disks or jacks.
The spacers are anchored by an appropriate product or adhesive onto the cement slabs, at even intervals to support the tiles themselves at each corner.
If no cement slabs are used, the spacers are anchored by an appropriate product directly onto the existing floor or waterproofing layer (fig. 52 and 53)

FIGURE 52

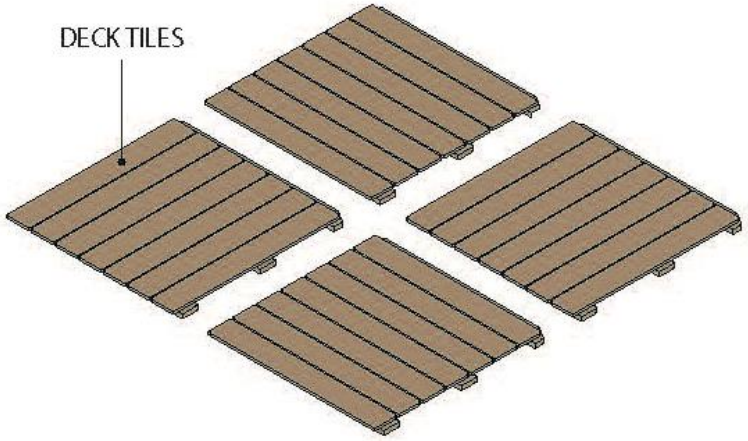

FIGURE 53

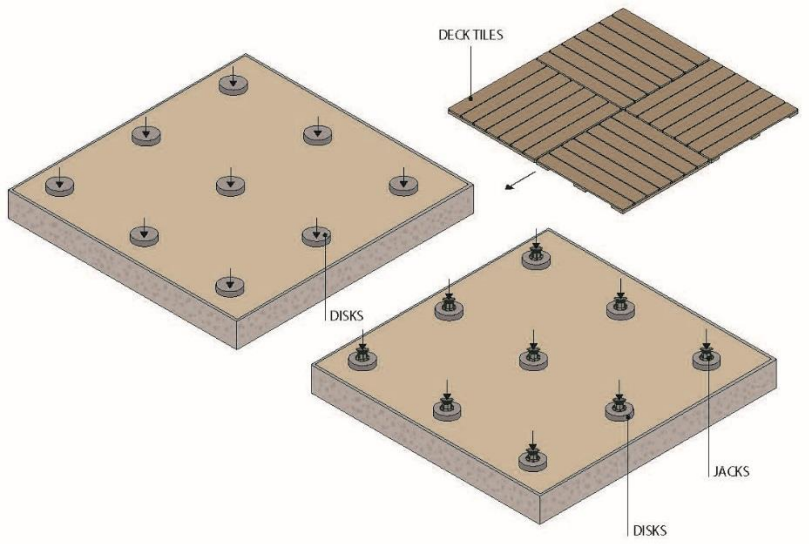

La San Marco Profili srl
Viale Europa 63, 31010 Soligo (TV) ITALY - Tel. +39 0438 980106 r.a - Fax +39 0438 980176 - P.I. 02195230269
info@lasanmarcoprofili.com - www.lasanmarcoprofili.com

INSTALLING THE DECK TILES

Once you have installed the supports (shims / disks / jacks and spacers) onto the cement slabs on the ground, or directly onto the existing floor, you can install the deck tiles (fig. 55, 56, 57, 58)

FIGURE 55

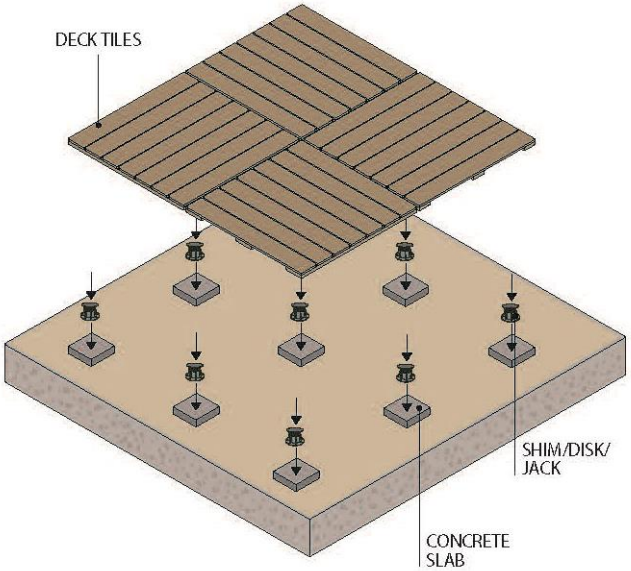

FIGURE 56

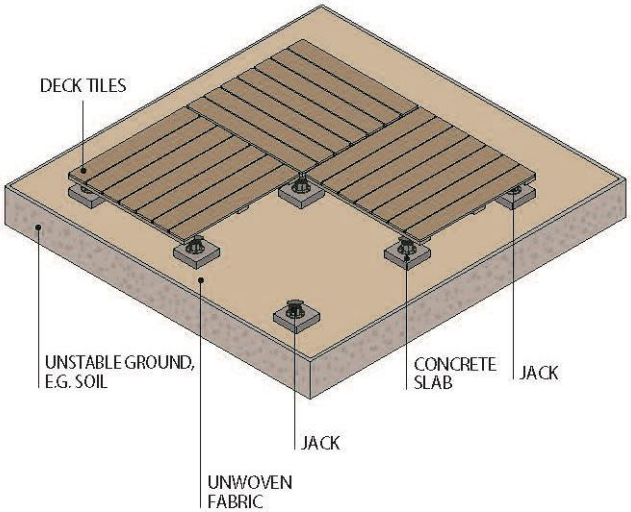

La San Marco Profili srl
Viale Europa 63, 31010 Soligo (TV) ITALY - Tel. +39 0438 980106 r.a - Fax +39 0438 980176 - P.I. 02195230269
info@lasanmarcoprofili.com - www.lasanmarcoprofili.com

FIGURE 57

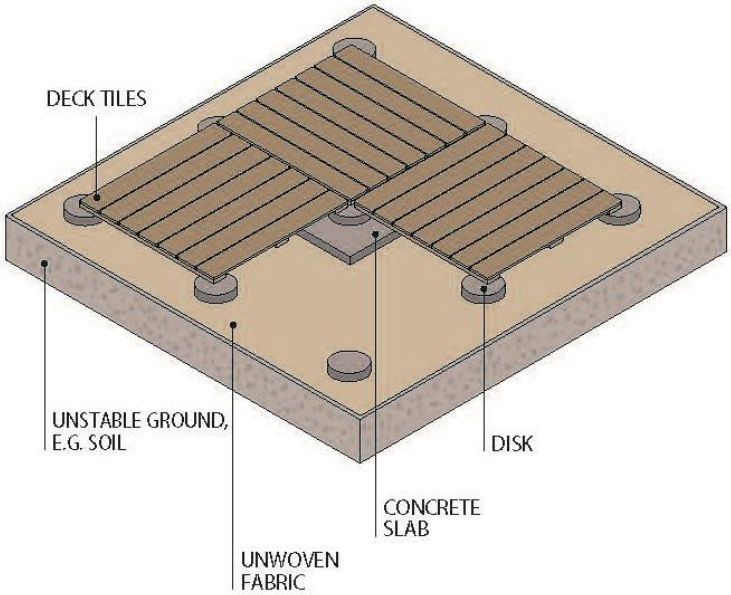

FIGURE 58

EXAMPLE OF INSTALLATION ON WATERPROOFED MEMBRANE OVER SCREED

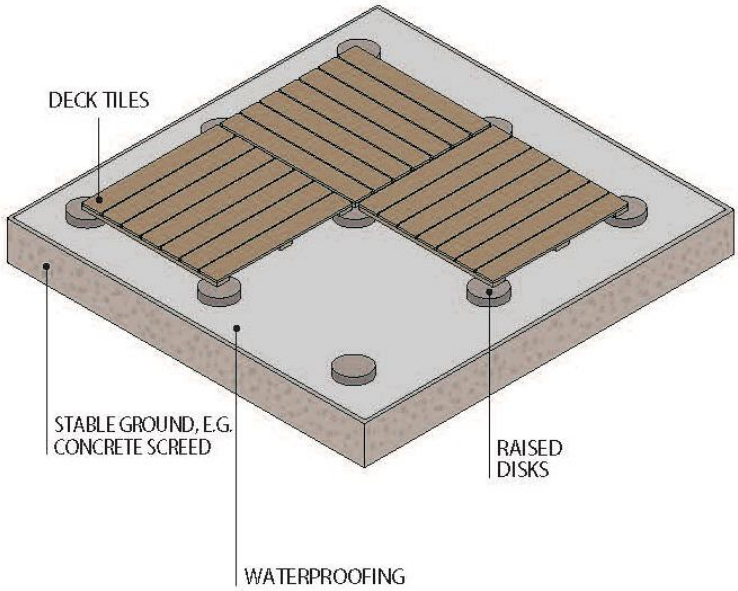

La San Marco Profili srl
Viale Europa 63, 31010 Soligo (TV) ITALY - Tel. +39 0438 980106 r.a - Fax +39 0438 980176 - P.I. 02195230269
info@lasanmarcoprofili.com - www.lasanmarcoprofili.com

The starting position for installation of deck tile floor must be determined in advance in relation to the configuration of the area, the alignments and corners, as well as aesthetic considerations.

If the surface has out of square corners, i.e. acute or obtuse (less than 90° or greater than 90° respectively), the deck tiles must be shaped accordingly (fig. 59).

FIGURE 59

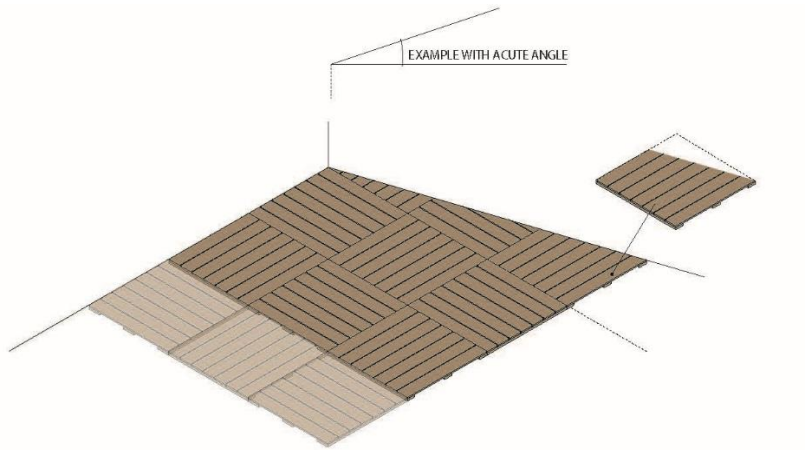

The disks and jacks used to support the tiles are fitted with four fins which act as spacers to ensure that the gaps between the tiles are uniform (fig. 60).

FIGURE 60

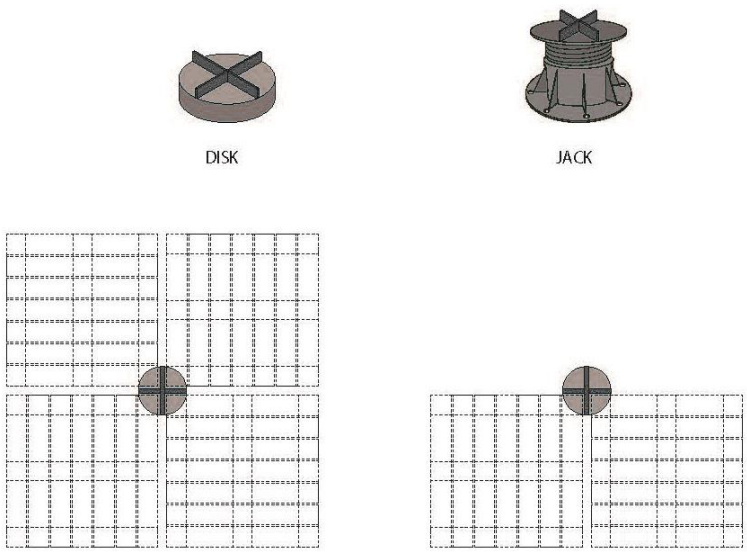

La San Marco Profili srl
Viale Europa 63, 31010 Soligo (TV) ITALY - Tel. +39 0438 980106 r.a - Fax +39 0438 980176 - P.I. 02195230269
info@lasanmarcoprofili.com - www.lasanmarcoprofili.com

To install the tiles on disks at the corners, against walls or in any case around the perimeter, the disks can be cut in half to support two tiles or into quarters to support a single corner tile; leave a clearance of at least 10 mm between the flooring and the vertical structure it is installed against (fig. 61).

FIGURE 61

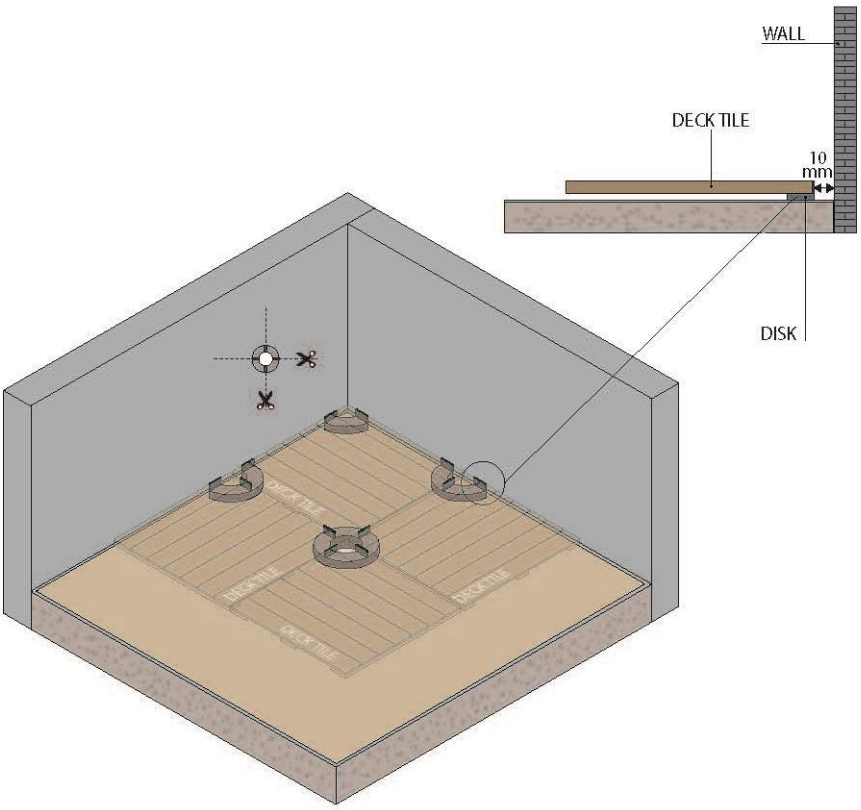

When using jacks to install the tiles in corners or against walls or other vertical structures, an in any case around the perimeter, no special pieces are available. The solution is simply to back off the jacks and keep the necessary spacing fins.
The jacks should be backed off at least 10 mm around the perimeter and against walls (fig. 62).

FIGURE 62

La San Marco Profili srl
Viale Europa 63, 31010 Soligo (TV) ITALY - Tel. +39 0438 980106 r.a - Fax +39 0438 980176 - P.I. 02195230269
info@lasanmarcoprofili.com - www.lasanmarcoprofili.com

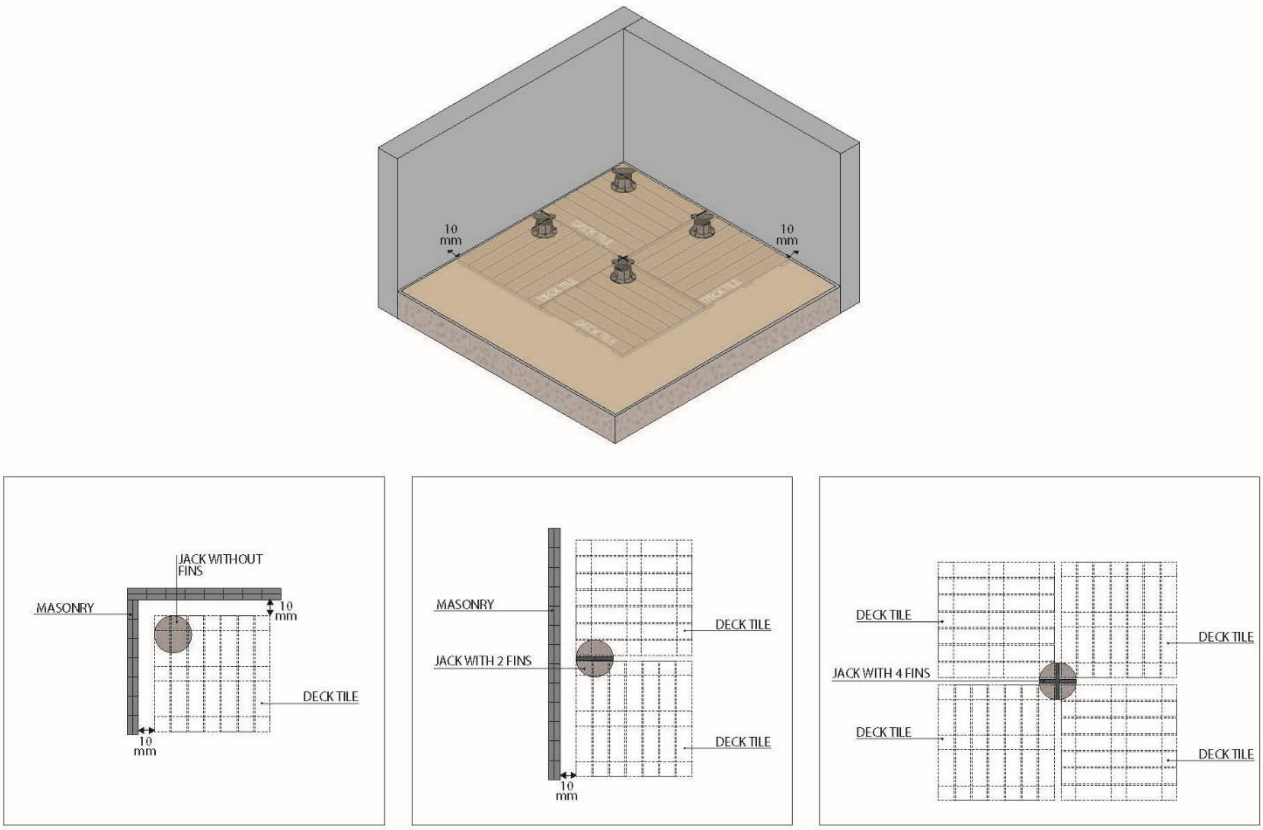

Deck tile floors, where they do not butt onto vertical structures, should be protected around the edge by wooden end pieces of the same type of wood as the flooring itself. These pieces are screwed onto the framework.
The end piece may be flush or recessed; if recessed, it must be 2 cm back from the edge of the floor (fig. 63).

FIGURE 63

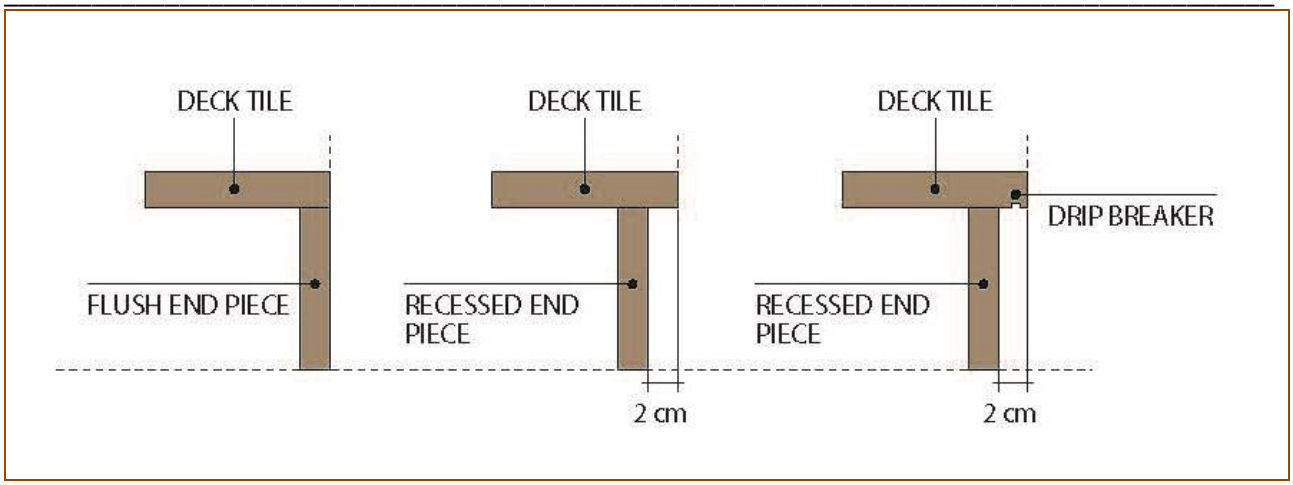

TREATMENT ON COMPLETION OF INSTALLATION

Once the floor is installed, the deck tiles must be washed with fresh potable water to eliminate any impurities and tannin stains.

Once the floor is completely dry, which takes around three days, it can be treated with DECK OIL or DECK H2O (see the respective data sheets for instructions).

La San Marco Profili srl
Viale Europa 63, 31010 Soligo (TV) ITALY - Tel. +39 0438 980106 r.a - Fax +39 0438 980176 - P.I. 02195230269
info@lasanmarcoprofili.com - www.lasanmarcoprofili.com